The copyright © of this thesis belongs to its rightful author and/or other copyright owner. Copies can be accessed and downloaded for non-commercial or learning purposes without any charge and permission. The thesis cannot be reproduced or quoted as a whole without the permission from its rightful owner. No alteration or changes in format is allowed without permission from its rightful owner.

UUM
Universiti Utara Malaysia

FACTORS AFFECTING INTENTION TO USE LEARNING MANAGEMENT SYSTEM AMONG EMPLOYEES OF TELEKOM MALAYSIA

By
MEOR AHMAD SHAHRUZZAMAN B MEOR HASHIM

Universiti Utara Malaysia

Thesis Submitted to
Othman Yeop Abdullah Graduate School of Business,
Universiti Utara Malaysia
in Fulfilment of the Requirement for the Degree of Doctor of Business Administration

OTHMAN YEOP ABDULLAH GRADUATE SCHOOL OF BUSINESS
UNIVERSITI UTARA MALAYSIA

PERAKUAN KERJA TESIS / DISERTASI
(Certification of thesis / dissertation)

Kami, yang bertandatangan, Memperakukan bahawa
(We, the undersigned, certify that) **Meor Ahmad Shahruzzaman B. Meor Hashim**

calon untuk Ijazah
(candidate for the degree of) **Doctor of Business Administration**

telah mengemukakan tesis / disertasi yang bertajuk:
(has presented his/her thesis / dissertation of the following title):

Factors affecting intention to Use learning management system among Employees of Telekom Malaysia.

seperti yang tercatat di muka surat tajuk dan kulit tesis / disertasi.
(as it appears on the title page and front cover of the thesis / dissertation).

Bahawa tesis/disertasi tersebut boleh diterima dari segi bentuk serta kandungan dan meliputi bidang ilmu dengan memuaskan, sebagaimana yang ditunjukkan oleh calon dalam ujian lisan yang diadakan pada:
20 September 2021.
(That the said thesis/dissertation is acceptable in form and content and displays a satisfactory knowledge of the field of study as demonstrated by the candidate through an oral examination held on:
20 September 2021.

Pengerusi Viva *(Chairman for Viva)*	: **Prof. Ts. Dr. Norazah Bt. Mohd Suki**	Tandatangan *(Signature)*	
Pemeriksa Luar *(External Examiner)*	: **Assoc. Prof. Dr. Hazril Izwar Bin Ibrahim (USM)**	Tandatangan *(Signature)*	hazrilizwar
Pemeriksa *Dalam* *(Internal Examiner)*	: **Prof. Dr. Shahizan Bin Hassan**	Tandatangan *(Signature)*	

Tarikh: **29 Mei 2022**
(Date)

Nama Pelajar (Name of Student)	:	**Meor Ahmad Shahruzzaman B. Meor Hashim**
Tajuk Tesis / Disertasi *(Title of the Thesis / Dissertation)*	:	**Factors affecting intention to Use learning management system among Employees of Telekom Malaysia.**
Program Pengajian *(Programme of Study)*	:	**Doctor of Business Administration**
Nama Penyelia/Penyelia-penyelia *(Name of Supervisor/Supervisors)*	:	**Assoc. Prof. Dr. Johanim binti Johari**

Tandatangan
(Signature)

Universiti Utara Malaysia

PERMISSION TO USE

In presenting this thesis in fulfilment of the requirements for a Post Graduate degree from the Universiti Utara Malaysia (UUM), I agree that the library of this university may make it freely available for inspection. I further agree that permission for copying this thesis in any manner, in whole or in part, for scholarly purposes, may be granted by my supervisor(s) or in their absence, by the Dean of Othman Yeop Abdullah Graduate School of Business (OYAGSB) where I did my thesis. It is understood that any copying or publication, or use of this thesis or parts of it for financial gain shall not be allowed without my written permission. It is also understood that due recognition shall be given to me and to the UUM in any scholarly use which may be made of any material in my thesis.

Request for permission to copy or to make other use of materials in this thesis in whole or in part should be addressed to:

Dean of Othman Yeop Abdullah Graduate School of Business
Universiti Utara Malaysia
06010 UUM Sintok, Kedah Darul Aman

UUM Universiti Utara Malaysia

ABSTRAK

Dalam era ini, pengetahuan adalah cara terbaik untuk mengukuhkan prestasi organisasi. Telekom Malaysia (TM) percaya bahawa pengetahuan adalah kunci kejayaan dan telah mencipta laluan pembelajaran yang disesuaikan untuk setiap pekerja. Atas sebab ini, TM telah melaksanakan Sistem Pengurusan Pembelajaran (LMS) baharu. Walau bagaimanapun, rekod menunjukkan bahawa penggunaan LMS semasa adalah sangat rendah, dan punca sebenar masih tidak jelas. Kajian ini memberi tumpuan kepada mengenal pasti faktor-faktor yang mempengaruhi niat pelajar untuk menggunakan LMS dengan memasukkan elemen faktor kemanusiaan. Teori Penerimaan dan Penggunaan Teknologi Bersepadu (UTAUT) digunakan untuk menangani perspektif faktor kemanusiaan. UTAUT dapat mengenal pasti jangkaan prestasi dan usaha, pengaruh sosial, dan keadaan yang memudahkan sebagai penentu langsung kepada niat dan tingkah laku. Konstruk latihan dimasukkan ke dalam model kerana kepentingannya dalam mengukuhkan niat pelajar dan bagaimana ia dianggap menyumbang kepada nilai dasar organisasi. Kajian ini menggunakan pendekatan kuantitatif. Fasa pertama kajian ini telah mengesahkan pengukuran konstruk. Tinjauan primer kemudiannya dijalankan untuk menguji hipotesis kajian dan model konseptual. Secara khususnya, kajian ini menggunakan Pemodelan Persamaan Struktur (SME) dengan menggunakan 27 item dalam soal selidik. Secara keseluruhannya, dapatan statistik menunjukkan bahawa keputusan yang dicapai adalah bersesuaian dengan data, berserta kesahan dan kebolehpercayaan nomologi yang memuaskan. Kajian ini melaporkan terdapat hubungan yang signifikan di antara pengaruh sosial, keadaan yang memudahkan, latihan dan niat pelajar. Walau bagaimanapun, jangkaan prestasi dan jangkaan usaha tidak mempunyai kaitan yang ketara dengan niat pelajar. Kajian ini mengesyorkan agar organisasi menekankan keperluan dan keutamaan pengguna akhir dengan memasukkan pekerja sebagai pemegang kepentingan utama bermula dari peringkat awal pembangunan LMS. Selain itu, pihak pengurusan juga harus mempertimbangkan latihan sebagai salah satu faktor utama untuk menambah baik penggunaan LMS.

Kata Kunci: Penerimaan teknologi, Sistem pengurusan pembelajaran, niat, UTAUT, latihan.

Universiti Utara Malaysia

ABSTRACT

In this era, knowledge is the best way to strengthen organisational performance. Telekom Malaysia (TM) believes that knowledge is the key to success and has created a customised learning path for each employee. For these reasons, TM has implemented a new Learning Management System (LMS). However, records showed that the usage of the current LMS is very low, and the actual cause is still not apparent. This study focuses on identifying the factors affecting the learner's intention to use LMS by incorporating the element of human factors. The Unified Theory of Acceptance and Use of Technology (UTAUT) was used to address the human factors perspective. UTAUT identifies performance and effort expectancy, social influence, and facilitating conditions as direct determinants of behavioural intention. Training construct was included in the model because of its importance in strengthening the learner's intention and how it is thought to contribute to the organisation's bottom line values. The research used a quantitative approach. The study's first phase validated the construct measurement. A primary survey was then undertaken to test the study hypotheses and conceptual model. Structural equation modelling was used in particular, utilising 27 items in the questionnaire. Overall, the statistical findings showed that the results were fit for the data, with satisfactory nomological validity and reliability. This study reported significant relationships between social influence, facilitating condition, training and learner's intention. However, performance expectancy and effort expectancy did not significantly correlate with the learner's intention. This study recommends that organisations emphasise the need and preference of the end-user by including employees as primary stakeholders from the start of the LMS implementation stage. Additionally, management should also consider training as one of the main factors to improve LMS adoption.

Keywords*:* Technology Acceptance, Learning Management system, intention, UTAUT, training.

UUM
Universiti Utara Malaysia

ACKNOWLEDGEMENT

Alhamdulillah. Indeed, all praise is due to Allah, I thank Him, and I seek for His forgiveness. I seek refuge in Allah from the evil of myself and the evil of own deeds. Whoever Allah guides, no one can lead him astray, and whomever Allah leaves astray, no one can guide him. I thank Him for His blessings and guidance. He has provided me with the strength to face all tribulations and trials in completing this project.

First and foremost, I wish to express my most profound appreciation to my supervisor, Associate Professor Dr Johanim Bt Johari and Associate Professor Dr. Faridahwati Bt Mohd Shamsudin for their inspiration, guidance, support, and generosity. They inspired and motivated me greatly all through my DBA journey. Thank you also to my internal and external examiners for their valuable suggestions during my proposal defence and viva. My appreciation also goes to my colleagues at UUM for the knowledge shared.

I am indebted to my family, especially my beloved wife and children, who stood by me throughout this long journey. Without their continuous encouragement and understanding, it would have been difficult to complete this thesis. Finally, yet significantly, many people have contributed directly or indirectly to the success of this work. I ask Allah to reward and bless them all. Once again, thank you all. All of you have been helpful in this academic journey, and I really appreciate your moral support and I love each one of you.

Universiti Utara Malaysia

TABLE OF CONTENT

CERTIFICATION OF THESIS WORK iii

PERMISSION TO USE iv

ABSTRAK v

ABSTRACT vi

ACKNOWLEDGEMENT vii

TABLE OF CONTENT viii

LIST OF FIGURES xiii

CHAPTER 1 1

1.1 Introduction 1

1.2 Background of Study 1

1.3 Problem Statement 6

1.4 Research Questions 13

1.5 Research Objectives 14

1.6 Significance of the Study 14

1.7 Scope and Limitations of the Study 16

1.8 Terms of Definitions 17

1.9 The Organisation of the Thesis 19

CHAPTER 2 21

2.1 Introduction 21

2.2 Background of Telekom Malaysia Berhad (TM) 21

2.3 TM Vision and Mission 22

2.4 TM Organisation Chart 23

2.5 Market Positioning 24

2.6 Transformation Journey. 26

2.7 Knowledge Management in TM 27

2.8 Digital Learning Solution (LEARN) 28

CHAPTER 3 30

3.1 Introduction 30

Universiti Utara Malaysia

3.1.1 Learning Management Systems 30
3.1.2 Definition of Learning Management Systems 31
3.1.3 Advantages of Learning Management Systems 33
3.1.4 Disadvantages of Learning Management Systems 34
3.1.5 Barriers and Challenges for LMS acceptance. 35
3.2 Technology Acceptance Theories 39
3.2.1 The Unified Theory of Acceptance and Use of Technology (UTAUT) 40
3.2.2 Justification for the use of UTAUT in the current study 42
3.2.3 The Theoretical Framework 44
3.3 Review on the Conceptual Model Variables 46
3.3.1 Performance Expectancy 46
3.3.2 Effort Expectancy 48
3.3.3 Social Influence 50
3.3.4 Facilitating Conditions 51
3.3.5 Training 53
3.4 Behaviour Intention (BI) to Use LMS. 55
3.4.1 Definition of Behavioural Intention 55
3.4.2 The Importance of Behavioural Intention 56
3.5 Chapter Summary 57
CHAPTER 4 58
4.1 Introduction 58
4.2 Research Design 58
4.2.1 Research Model 59
4.3 Population and Sampling 60
4.3.1 Sampling 61
4.3.2 Sampling bias 62
4.3.3 Convenient Sampling 64
4.3.4 Unit of Analysis 68
4.3.5 Sampling Size 68
4.4 Instrument Adaptation and Measurement 70
4.5 Questionnaire Design 75
4.5.1 Types of Questionnaires 75
4.5.2 Collections of Questionnaire 76

Universiti Utara Malaysia

4.5.3 Rating Scale 77
4.5.4 Validity and Reliability of the Research Instruments 77
4.5.5 Content Validity and Face Validity 78
4.5.6 Pilot Study and Construct Validity 79
4.5.7 Ethical Considerations 80
4.6 Analytical Procedure 81
4.7 Chapter Summary 82

CHAPTER 5 83
5.1 Chapter Overview 83
5.2 Analysis of Survey Response 83
5.2.1 Response Rate 83
5.3 Data Coding and Data Entry 84
5.4 Data Screening and Cleaning Analysis 84
5.4.1 Data Entry Errors 85
5.4.2 Treatment of Missing Data 86
5.4.3 Test of Multicollinearity 87
5.5 Demographic Profile of Respondents 88
5.6 Descriptive Statistics Analysis 91
5.7 The Rationale Behind Choosing PLS-SEM 95
5.7.1 Assumption of Normality 96
5.8 Model Specification 97
5.9 Evaluation of Measurement Model (Outer Model) 98
5.9.1 Convergent Validity 99
5.9.2 Discriminant Validity 104
5.10 Evaluation of Structural Model (Inner Model) 108
5.10.1 Multicollinearity Test 108
5.10.2 Structural Model Path Coefficients/Relationships 109
5.10.3 Coefficient of Determination (R^2 Value) 113
5.10.4 Effect Size (f^2) 115
5.10.5 Blindfolding and Predictive relevance/ predictive accuracy (Q^2) 116
5.10.6 Goodness-of-Fit (GOF) Index 119
5.10.7 Summary of the Findings 119
5.11 Chapter Summary 120

Universiti Utara Malaysia

CHAPTER 6 122
6.1 Introduction 122
6.2 Recapitulation of the Study 122
6.2.1 Effect of Performance Expectancy on Learners Intention 123
6.2.2 Effect of Effort Expectancy on Learner's Intention 126
6.2.3 Effect of Social Influence on Learner's Intention 128
6.2.4 Effect of Facilitating Conditions on Learners Intention 129
6.2.5 LMS Training Effect on Learner's Intention 131
6.3 Implications of Research 132
6.3.1 Theoretical Implications 132
6.3.2 Practical Implications 133
6.4 Recommendations for Telekom Malaysia 135
6.5 Limitation of the study 141
6.6 Recommendations for Future Research 143
6.7 Conclusion 144
Reference 145
Appendix A: Questionaire 177
Appendix B: Pilot Test Output 184
Appendix C: Respondents' Demographic Profile 190
Appendix D: Data Screening and Cleaning 192
Appendix E: Normality Test 194
Appendix F: Multicollinearity Test 195
Appendix G: Descriptive Statistic 197
Appendix H: Correlations Test 205
Appendix I: The Research Model in PLS 208
Appendix J: Cross Loadings 209
Appendix K: Coefficient of Determination (R2) 210
Appendix L: Path Model Significance Results (Bootstrapping) 211

UUM Universiti Utara Malaysia

LIST OF TABLES

Table 3.1 *Terminology Differences Between Studies* 38
Table 4.1 *Sampling Size Base on Number of Population* 69
Table 4.2 *Number of Sampling/Respondent* 70
Table 4.3 Construct and Measurement Item 72
Table 4.4 *List of experts and recommendations* 79
Table 4.5 *Reliability Coefficient Values for Items of Constructs in Pilot Study* 80
Table 5.1 *Summary of the Total Questionnaires and the Response Rate* 84
Table 5.2 *Data Entry for Demographic Profiles* 85
Table 5.3 *Data Entry for Section B (selected items)* 86
Table 5.4 *Correlations of the Variables* 88
Table 5.5 *Demographic Profile of Respondents (n=325)* 90
Table 5.6 *Descriptive Statistics of the Constructs* 92
Table 5.7 *Independent Samples T-Test between Gender and Learner's Intention* 93
Table 5.8 *One-Way ANOVA between other Demographic Factors and Learner's Intention* 94
Table 5.9 *Results of the Skewness and Kurtosis for Normality Test* 96
Table 5.10 *Item Loadings* 100
Table 5.11 *Convergent Validity Analysis* 103
Table 5.12 *Cross-Loadings* 106
Table 5.13 *Fornell and Larcker (1981) Criterion* 107
Table 5.14 *Multicollinearity Test* 108
Table 5.15 *Path Coefficients & Hypotheses Testing* 110
Table 5.16 *Effect Size Rating* 115
Table 5.17 *Quality Indicators of the Model* 117
Table 5.18 *Summary of the Findings* 119

Universiti Utara Malaysia

LIST OF FIGURES

Figure 1.1 *Number of Pax Trained From 2014 – 2018* Source: Training Management Unit TCOE (2019) 9

Figure 1.2 *Instructor-Led Training Vs. Digital Training 2014-2018* Source: Training Management Unit TCOE (2019) 9

Figure 1.3 *Justification for New LMS* Source: TM LEX Proposal (2018) 11

Figure 2.1 *Market Share Contribution to Bursa Malaysia.* Source: MCMC Industry Annual Report (2020) 25

Figure 2.2 *Market Positioning by Industry.* Source: MCMC Industry Annual Report (2020) 25

Figure 2.3 *TM LEARN Landing Page* Source: TM LEARN Portal 29

Figure 3.1 *Original UTAUT model (Venkatesh et al., (2003)* 42

Figure 3.2 *The theoretical framework for this study* 44

Figure 4.1 *Research Framework* 60

Figure 4.2 *Sampling Process Steps* Source: Taherdoost (2018) 66

Figure 5.1 *Research Model* 98

Figure 5.2 *Item Loading* 101

Figure 5.3 *Path Model Significance Results (Bootstrapping)* 112

Figure 5.4 *Coefficient of Determination (R2)* 114

Figure 5.5 *Cross Validated Redundancy* 117

Figure 5.6 *Cross Validated Communality* 118

Figure 6.1 *Example of some TM remote exchanges location* 124

Universiti Utara Malaysia

CHAPTER 1

1.1 Introduction

This section provides a summary of the research, which is divided into eight parts. The areas are the study's background, problem statement, research questions, research objectives, the significance of the study, scope and limitations of the study, key definitions in this study, and lastly, organisation of thesis chapters.

1.2 Background of Study

Knowledge management (KM) is the best way to strengthen and boost organisational performance (OP) in the new knowledge era (Darroch, 2005; Rhodes et al., 2008). According to Jafari et al., (2010), knowledge management is defined as an oriented methodology to create and manage knowledge. Therefore, knowledge management is applied when using the organisations' knowledge assets to enhance and improve organisational performance.

Managing knowledge has been the basis of success in the last three decades, and this has been highlighted by many researchers (Drucker, 1993; Ho, 2008; Jiang & Li, 2009; Kim & Gong, 2009; Liao & Wu, 2010; Wiig, 1997). According to Kridan and Goulding (2006), knowledge management will support 80 per cent of the world's largest companies by resolving fundamental issues related to KMS implementation, such as better decision making, improved customer relationship and management, new value creation through new services (innovations), and additional market opportunities. Knowledge management can be derived from various formats and

sources, including documents, conferences, opinions, and observations stored in the database repository and related expert systems.

In his attempt to clarify the nature of knowledge management, Koenig (2012) cited Davenport (1994) concept of knowledge management as "the process of capturing, storing, and effectively using knowledge" (Koenig, 2012, p.1). This study, however, is not focusing on the overall process of knowledge management. Instead, it focuses on one part of the knowledge management process: "effectively using knowledge," as defined by Davenport (1994). Since a new Learning Management System (LMS) is underway to replace the existing one in Telekom Malaysia (TM), the current system must be examined to provide input for developing and implementing the new system.

To ensure the sustainability of the organisation, TM is implementing a transformation programme. The transformation aim was to ensure TM remain relevant in the market share (TM Annual Report, 2016). Among the key areas of the transformation programme is knowledge enhancement of TM employees. Many training programme had been designed for the employees for every level covering every areas from technology to leadership (TM Annual Report, 2016). The implementation of the new LMS is targeted to rampant the knowledge transfer process. However, based on previous record, the usage of the current LMS is very low (Ahmad, 2018). The actual caused of the low usage of the current LMS is still not apparent.

Based on these situations, this study is focusing on identifying the factors affecting the learner's intention to use the Learning Management System (LMS) as a tool that supports Knowledge Management (KM). According to the LMS implementation team in TM, the rate of the LMS usage can be enhanced by addressing the technological part of the system, such as mobility and features of the LMS (Ahmad, 2018). From

previous record, LMS has been implemented in TM since 2005. The LMS had been upgraded a few times since then, however the usage rate of the system remains relatively low.

This study on the other hand is considering the element of human factors from the perspective of end users towards the factors influencing the LMS use intention. The findings of this study will shed new perspective on the LMS utilisation issues to the management of the organisation. To addressed the perspective of the human factors, this study is using the Unified Theory of Acceptance and Use of Technology (UTAUT) model originally created by Venkatesh et al., (2003). UTAUT identifies performance expectancy, effort expectancy, social influence, and facilitating conditions as direct determinants of behavioural intention.

Performance expectancy (PE) is concerned with individuals' beliefs that a system use will enhance their job performance to perform various tasks (Venkatesh et al., 2003). In this study, it is the extent to which users believe that using LMS will enhance the learning outcomes by accomplishing the learning activities. The better presumption that users form about the promising usefulness of the LMS, the more chances that they will use or continue to use the system in the future (Alshehri et al., 2020a). In the absence of this PE, the system might not be utilised even if it is easy to use, easy to learn, and satisfying to use.

Effort expectancy is defined as the degree of ease associated with the use of the system (Venkatesh et al., 2003). In this context, it is the user's perception of the LMS usage ease or difficulty. Venkatesh et al. (2003) claim that the users' acceptance of an application is determined by users' perceived ease of use. Although data from several sources have identified a significant association between effort expectancy and users

intention to use learning technologies (Alshehri et al., 2020a), the claim was not the case in other studies (Alshehri et al., 2019). Thus, EE is included in this study in order to further assess the relationship and confirm whether it is valid in the context of Telekom Malaysia (TM).

Social Influence (SI) relates to whether important people (friends, colleagues, and family members) influence an individuals' intention to use the system (Venkatesh et al., 2003). In this study, it is the user's perceptions of the influence of Telekom Malaysia Management, officials, peers and friends on motivating users to use LMS. So, when users in the organisation think they should adopt the system, they tend to conform to the opinions of others (e.g., management, peers and friends) and adopt the system (specific behaviour) (Eckhardt et al., 2009). SI was adapted in this study as it has been recognised as fundamental to technology adoption as the influence of peers, change agents, organisational pressure, and societal norms are inevitable (Rogers, 1995; Venkatesh et al., 2003).

Universiti Utara Malaysia

Facilitating conditions (FC) refers to the degree to which an individual believes that an organisational and technical infrastructure exists to support use of the system (Venkatesh et al., 2003). In this context, ensuring technological infrastructure is rich, reliable, and capable of providing the needed support for stakeholders is a critical element for LMS success (Alshehri et al., 2020a). It is also believed that the availability of environmental resources and organisational and technical infrastructures would help users to employ them in their learning activities, thereby promoting their use of the LMS (Venkatesh et al., 2003). Some theoretical foundations have acknowledged the effect of facilitating conditions on the intention to use the LMS (Alshehri et al., 2020a; Venkatesh et al., 2012). Facilitating conditions is adopted in this research to test whether the result of prior study is consistent in the context of Telekom Malaysia.

Additionally, to further extend the UTAUT model, training is added as a new construct to the model. Training refers to a planned effort by a company to facilitate employees' learning of job-related competencies. These competencies include knowledge, skills, or behaviours that are critical for successful job performance (Kumpikaite & Ramune, 2010). The goal of training is for employees to master the knowledge, skills, and behaviours emphasised in training programmes and to apply them to their day-to-day activities (Singh, 2017). Training was added to the construct after considering its importance in enhancing the learner's intention towards using the LMS and how it was usually considered as distinct from something that contributes to bottom line values to the organisation (Harris, 2016).

The UTAUT model has been scrutinised in wide-range of environments such as virtual learning technologies, cloud-based virtual learning environments (Hew & Syed Abdul Kadir, 2016), desktop web-conferencing (Lakhal & Khechine, 2016), and interactive whiteboards (Šumak & Šorgo, 2016). Additional usage of the model is seen in enterprise resource planning (ERP) software training (Chauhan & Jaiswal, 2016), tablet-PC in classroom instruction (Ifenthaler & Schweinbenz, 2016), and Moodle learning management system (Rahmaningtyas et al., 2020). Hence, the model has proven to be successful in a wide range of situations, and why it is used in this study as a guiding principle in the examination of learner's intention to use the LMS. It brings the benefit of being "a useful tool for managers needing to assess the likelihood of success for new technology introductions and helps them understand the drivers of acceptance" (Venkatesh et al., 2003, p. 425).

The end users in the case of this study are the employees of Telekom Malaysia (TM). The new LMS is expected to enhance the knowledge of TM employees at a fast pace to ensure the sustainability of the organisation. Although TM has started implementing

Universiti Utara Malaysia

the new LMS since 2015, it is still not fully completed. Due to Covid 19 pandemic, the development of the new system was delayed. The new LMS is in its final stage of development and is scheduled to be launched in the fourth quarter of 2021.

Earlier implementation of the LMS in TM have been skewed towards the fulfilment of e-learning environment. This is also similar in the case of the newly implemented LMS. TM's implementation team is stating that the lack of features and functionality in the current LMS is the main contributors for the low utilisation. Hence new LMS with better features and functionality needs to be implemented (Ahmad, 2018). Consequently, this quantitative research is trying to find other element that could be the factors of influencing the LMS utilization aside from the technical aspect.

The empirical results of this study will help to plug the gap in the prevailing body of literature with reference to the determinants of learner's intention to use the LMS among business employees in a developing nation. The study will also furnish new perspectives on the findings of earlier research. The proposed model could aid organisation managements to identify the specific influences in determining the factors that influence the use intention of the new LMS.

1.3 Problem Statement

Telekom Malaysia (TM) has become one of the most significant knowledge-based organisations in the country. Telekom Malaysia's achievement is critical in supporting the nation's growth and prosperity (Nor & Nor, 2008). As a company that believes that information is the key to success, TM has created a customised learning path for each employee at every level of the organisation, including a portfolio of strategy, business, and leadership courses (TM Annual Report, 2016).

TM had implemented a few Learning Management Systems (LMS) to deliver its employees' knowledge through the years. The first LMS implemented by TM was called "People Soft," followed by the "Training Resources Information System (TRIS)" and the current LMS named "Learning Solution (LSO)." The latest LMS in the process of implementation now is called "Digital Learning Solution (DLS) or "LEARN" in short. The changes that took place in the new LMS is expected to improve the user and the administrative experience in terms of reporting, system integration, and mobility capabilities to better support TM's digital transformation agenda.

However, one of the gruelling concerns that led to the implementation of the new LMS (LEARN) is the low usage rate of the current LMS (LSO). Hence, without understanding the factors that contributed to the low usage of the current LMS (LSO), it is worried that the investment in the new LMS (LEARN) will be futile. Knowing the factors contributing to the low usage issues is crucial to ensure the investment made on the new LMS (LEARN) will yield expected returns.

Universiti Utara Malaysia

The problem with low usage of technology in Malaysia is still very much an issue. For example, Zainal and Zainuddin (2020), in their study to investigate technology adoption in Malaysia school stated that it is especially crucial to consider the enabling factors of technology use and also consider the reasons why some initiatives are more successful than others within the context of implementation. In another study conducted to investigate the innovation and technology adoption challenges among SME in Malaysia, it was mentioned that the Malaysian government master plan for the SME full potential has fallen short due to the low technology usage by the SME (Mustafa & Yaakub, 2018).

However, to conduct a study on the usage rate for the new LMS (LEARN) is not feasible at the moment, since it is still in the implementation stage. Therefore, to understand the factors contributing to the low usage issues, data from the current LMS (LSO) were used. The data were manually compiled by the Training Management Unit (TMU) in TM Technical Centre of Excellence (TCOE) on the proficiency certification programme. The certification programme is a requirement set by the Malaysia Communication and Multimedia Commission (MCMC) under the MCMC act 1998. Under this act, Telekom Malaysia (TM) is the only authorised Certifying Agency for the programme. The MCMC act (1998) implied that every person involved in telecommunication works, especially those engaged with telecommunication networks, must obtain a proficiency certificate from Telekom Malaysia (TM).

The Proficiency Certificate programme is conducted in two ways: (a) Instructor-Led Training Session (Classroom), and (b) digital training (e-learning), where participants need to acquire the training module from the LMS (LSO) and self-learn the topic before sitting for an online assessment. Figure 1.1 and Figure 1.2 indicate a significant difference between the number of participants that opted for instructor-led training against those who opted for digital training.

In 2016, the number of participants who chose digital training increased significantly (from 70 to 2,273). However, the total increment only represented about 5% of the number of participants in the whole certification programme. In 2017, the number of digital learning participants increased by 10% of the total number of certifications programme participants. However, the growth was due to the enforcement of the MCMC Act 1998 that urged TM employees to be immediately certified.

Universiti Utara Malaysia

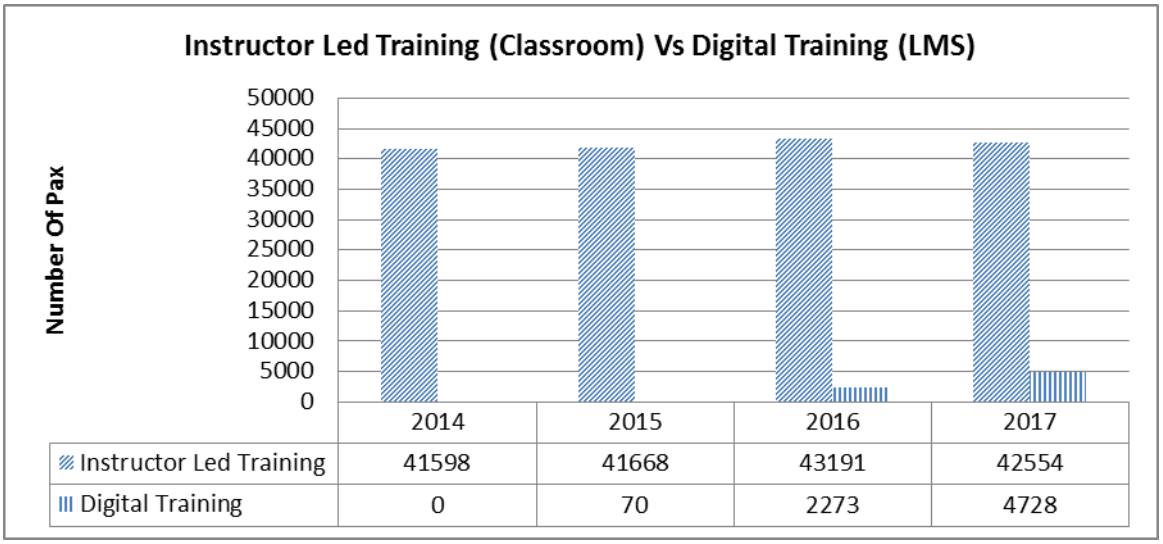

Figure 1.1
Number of Pax Trained From 2014 – 2018
Source: Training Management Unit TCOE (2019)

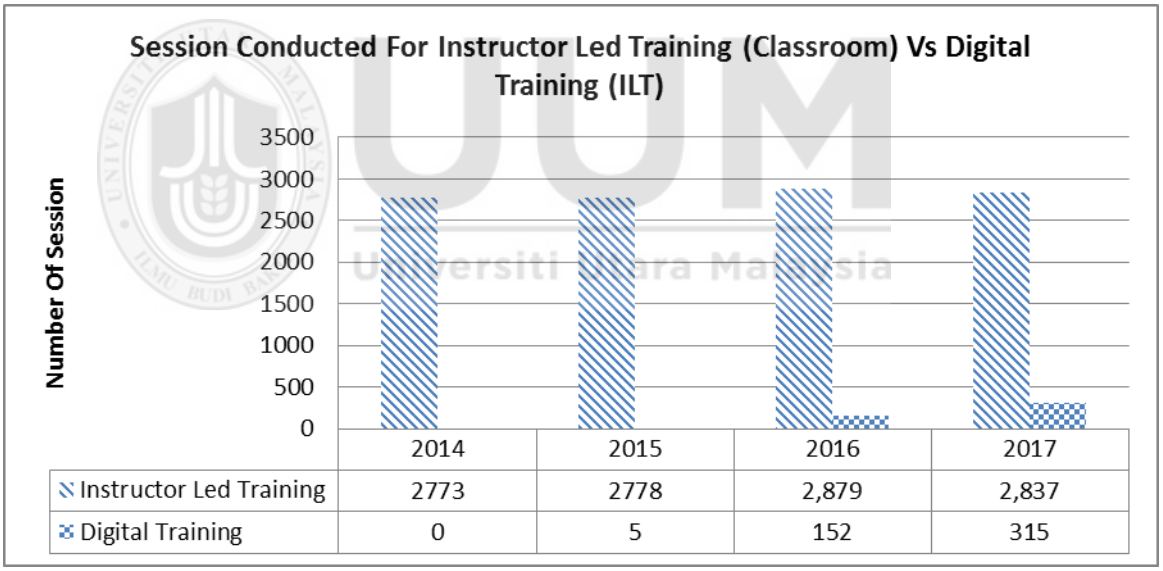

Figure 1.2
Instructor-Led Training Vs. Digital Training 2014-2018
Source: Training Management Unit TCOE (2019)

Although there has been an increase in LSO acceptance, the system's usage remains low. The low usage of such a tool is not unique to TM; a similar finding was also reported in a university in the USA (Nafsaniath et al., 2015). Hustad and Arntzen (2013) found that only certain LMS features are regularly used, such as delivering assignments and notes, but not other features like chats and online discussions. For an

LMS to be entirely successful, it must be utilised to its best potential. Understanding the LMS usage pattern would make it easier for the implementers to overcome the system's drawbacks and enhance learning activities.

All the LMSs in TM were developed based on e-learning requirement. It was not based on users' needs and preferences. For instance, the new LMS (LEARN) was implemented to replace the current LMS (LSO) because of its' incapability's. For example, the pain point for LSO is said to be lack of mobile accessibility, limited facilities for digital learning, difficulties in tracking, taking too long to produce reporting, and lack of the number of participants, as shown by Figure 1.3.

However, the real reason for the low usage is still not apparent. To the best of the researcher's knowledge, systematic research to address the problem of the LMS low usage in TM has yet to be explored. Although a system capability may have contributed to the low usage of the system, it might not be the sole contributor. Furthermore, previous studies indicated that having a new LMS in place was insufficient to increase numbers of LMS users (Coleman & Mtshazi, 2017). Other factors could also contribute to the low usage of the LMS.

Since the new LMS (LEARN) will be equipped with better features and capabilities that will make up for all the flaws in the current LMS, it is unlikely that the technical issues will pose any constraint to the utilisation of the LMS. Hence, this study focuses on human factor of the end users that may contribute to the low utilisation of the LMS. By examining the factors contributing to the user preferences in using the LMS, this study will provide significant insights in promoting the use of the LMS. In other words, the success of the LMS is very much depending on the adoption of the system by the intended learners. Therefore, assessing the key barriers and promoters for learners to

use the LMS is crucial and is regarded as an essential factor in determining the success of the new LMS implementation project (Hwa et al., 2016).

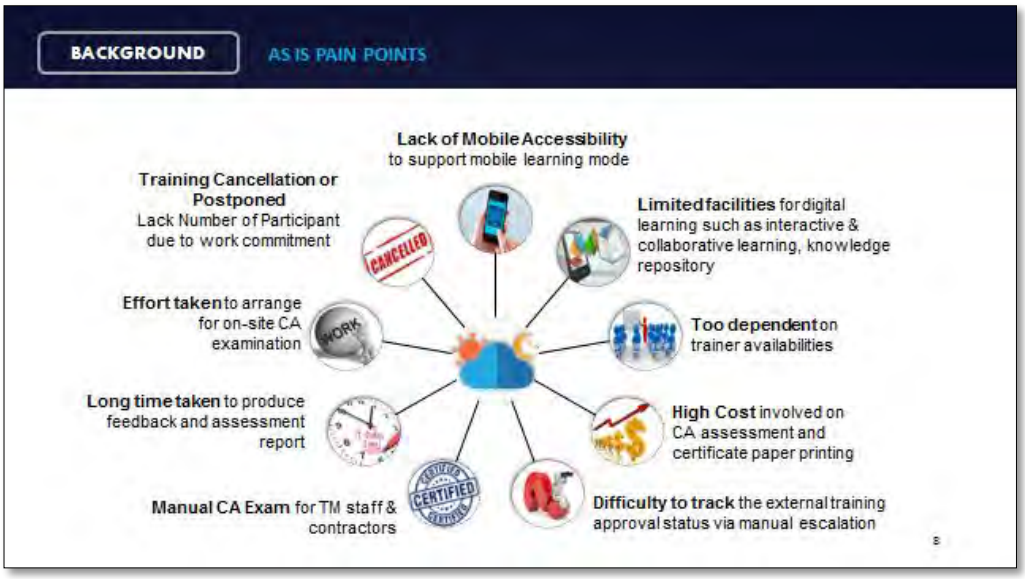

Figure 1.3
Justification for New LMS
Source: TM LEX Proposal (2018)

UUM
Universiti Utara Malaysia

Based on the literature review, most studies have been conducted on the issues of LMS use. However, most of them were conducted in the education or academic environment. For example, a research was conducted in Saudi Arabia to determine the factors affecting faculty members usage of the LMS at a university in the kingdom (Al Suwailem, 2018). Another study on technology usage was done in Australia involving school children and an interactive whiteboard in the classroom (Mariz et al., 2017). A similar study was conducted in Germany, except that the respondents were school teachers (Karimzadeh et al., 2017). Coherently, a study was conducted in Iraq to provide a framework on LMS usage for higher education's learning management system (Radif, 2018). Zoubi & Issa, (2017), in a study conducted in Jordan mentioned that, although E-learning has been widely accredited and acknowledged in education, very few researchers aimed to examine and characterise the picture of Learning

Management System (LMS) adoption among students in general, and adult workers in particular.

Due to the scarcity of research in the industrial setting, the factors influencing employees in this particular context is crucial to be assessed. This assessment is vital due to the LMS's advantages to both workers and the industry (Bakar & Jalil, 2017). LMS offers many benefits, such as delivering high-quality learning and training, and it is done at a little cost and in a short time. LMS can increase the level of information technology literacy among learners, and most importantly, it can produce a competitive workforce (United Nations, 2015). The number of companies implementing LMS is growing in Malaysia since the Multimedia Super Corridor's early flagship. However, the number is still relatively low (Moshari, 2019). With the findings of this research, organisations will have a better understanding of the obstacles and promoters for the LMS usage. Hence, more organisations in Malaysia would be able to effectively introduce the LMS in the future.

Universiti Utara Malaysia

The Technology Acceptance Model (TAM), the Theory of Planned Behaviour (TPB), TAM2, the hybrid TAM and TPB model, the Model of Personal Computer Utilisation (MPCU), and social cognitive theory (SCT), among others, have been proposed to describe the factors influencing LMS acceptance. The Unified Technology Acceptance and Use of Technology (UTAUT) is one of the most common theories. UTAUT was built based on previous technology acceptance models' and it is believed to have higher explanatory power than the other models (Thomas et al., 2013). It was why UTAUT was used in this analysis.

Based on the objective of this research, a simplified version of the UTAUT was used. The elements of UTAUT consist of performance expectancy, effort expectancy, social

influence and facilitating condition. Training is a new element that was added to the UTAUT model in this study. Training was added to the study because past researchers found that training had played an essential role in increasing the usage of the LMS (Algahtani, 2017; Nafsaniath et al., 2015).

1.4 Research Questions

The usage of LMS in TM is essential as it plays a vital role in determining the organisations' future well-being. Existing data indicated that the use of the LMS (LSO) is relatively low compared to instructor-led training (ILT). TM management believed that this situation resulted from the lack of features in the current LMS (LSO), resulting in the recent implementation of the new LMS (LEARN). However, having a new LMS in operation would not be enough to increase the number of users (Coleman & Mtshazi, 2017). Therefore, this study aimed to find answers to the following questions:

Main Research Question:

What are the factors that affect learners' intention to use the LMS?

Sub Research Question:

a. What is the relationship between internal factors (such as Performance Expectancy and Effort Expectancy) and learners' intention to use LMS (LSO)?

b. What is the relationship between external factors (such as Social Influence, Facilitating Conditions, and Training) and learners' intention to use LMS (LSO)?

Universiti Utara Malaysia

1.5 Research Objectives

In response to the above-mentioned research questions, the present study aimed to achieve the following research objectives:

Main Objective:

To investigate factor's affecting learners' intention to use LMS.

Sub research objectives are:

a. To examine the effect of internal factors on the intention to use LMS among TM employees.
b. To examine the effect of external factors on the intention to use LMS among TM employees.

1.6 Significance of the Study

This study's results are beneficial for Telekom Malaysia and other Malaysian businesses. It will help decision-makers consider the relevant factors to LMS acceptance and increase the possibility of success for the LMS implementation. Additionally, the result will allow the system developers to understand and eliminate the barriers and challenges in establishing LMS acceptance in the public sector.

This study will provide new strategic approaches to facilitate LMS acceptance in Malaysia's public sector and provide a base for future research concerning the model and the proposed acceptance and its application to other contexts. Second, a Learning Management System (LMS) is a type of information system that requires a substantial amount of time and money to implement. As a result, it is critical for management to

Universiti Utara Malaysia

investigate and comprehend the variables that influence users' acceptance or rejection of the Learning Management System (Zadeh et al., 2017).

For organisations to stay ahead of their competitors, they need to improve their customer service and innovation capabilities, increase flexibility and adoption, empower their employees, and continually create new knowledge, share, and learn (Hussin, 2014). Continued efforts to upgrade organisational knowledge resources will keep organisations competitive (Hussin, 2014). One of the fastest ways to disseminate knowledge across the organisation is with the aid of LMS. As a result, to bring new perspectives to the analysis and provide more insight into the organisation, this study will concentrate on the issues of LMS use from an industry's perspective.

The current research is also important in several ways. To begin with, the study used the Unified Theory of Acceptance and Use of Technology (UTAUT) as the underpinning theory and expanded it by adding a new independent variable, training, that had not previously been investigated. Furthermore, empirical studies on the impact of training on learners' intentions to use LMS, especially in Asian countries, are scarce (Qureshi et al., 2012). Additionally, after an exhaustive literature review, the researcher found that most prior research on LMS was conducted in an academic environment. Very few looked at LMS usage issues from the industry's eyes (Bakar & Jalil, 2017).

Past researchers have established the potential benefits of using LMS in their study (Abdeleh & Sandhu, 2010; Asiri et al., 2012; Boothe, 2017). Hence, this research contributes to better understanding technology acceptance levels by dwelling into the promoters and possible barriers to LMS usage in an organisational environment. By implementing UTAUT as the basis, this research will recommend the organisation on

better ways to increase LMS use. Finally, since this study focuses on Malaysia's context, it will provide new knowledge of technology acceptance in the Asian region.

1.7 Scope and Limitations of the Study

This study investigated the factors that affect learners' intentions to use the 'LMS' (LSO) in TM. The newly implemented LMS (LEARN) could not be officially used as it is still at the digital content preparation stage. The content includes training videos and interactive notes. Hence, this study had to examine the learners' intention of using LSO.

The Information Technology and Network Technology (IT&NT) group was the focus of the current studies. IT&NT is accountable for planning, building, providing, managing, and maintaining external and internal communications for TM. It propels TM into the era of convergence, creating value through information and network technology (TM Annual Report, 2016). They were chosen because they were the company's largest division, accounting for 45% of all TM employees, and they are the primary target users of the LMS.

Furthermore, their daily tasks relied on their technical knowledge of the current technology that is changing rapidly, and the LMS was targeted as a reference point for them. The total number of IT & NT employees was 12,030 as of August 2018. There were ten different units under this group that were targeted as potential respondents. The units include Business Finance, Group IT, Technical Centre of Excellence, and Network Development, to name a few.

As mentioned in the previous section, the present study has used a dominant view of the use and implementation of LMS through the usage of UTAUT via linking the

Universiti Utara Malaysia

external and internal factors. Earlier studies on technology usage and implementation had used several theories such as the theory of planned behaviour, theory of reason action, technology acceptance model, diffusion of innovation, learning theories, etc. It seemed, now, that those theories have less capability in explaining the intention and the actual use of LMS (Dai et al., 2019). Keeping abreast of those changes with technology, buyers, and service providers, Venkatesh, Morris and Gordon (2003) and Venkatesh et al., (2011) advocated an integrated theory replacing those fragmented theories, which could better explain how humans and society impact usage and implementation of technology (Barrane et al., 2018; Chao, 2019). In this study, the UTAUT model was used to explain the relations of the internal and external factors that influence LMS usage intention. Additionally, the researcher included one latent variable with the widely used UTAUT to ensure the robustness of the findings in the observed context (Uddin et al., 2019).

Universiti Utara Malaysia

1.8 Terms of Definitions

With regard to this study concerning Telekom Malaysia (TM), below are some elaborations for the specific term used in this study.

a. Performance expectancy (PE)

It refers to the degree of believing that the individual using the system will perform higher. The influence of performance expectancy has been confirmed in both voluntary and compulsory settings and situations with less experience (Ayaz & Yanartas, 2020). Within the scope of this research, performance expectancy means that users prefer LMS due to its usefulness, as it makes business faster, increases productivity and is in general useful in performing its duties.

b. Effort expectancy (EE)

It expresses the degree of convenience regarding the use of the system. The effort expectancy factor has an influence on behavioural intention in both voluntary and compulsory use environments (Ayaz & Yanartas, 2020). Effort expectancy provides the measurement of a system's interface design, ease of use, flexibility, and ease of learning (Carter & Belanger, 2004).

c. Social influence (SI)

It refers to the degree to which the person who is deemed to be important to the individual believes that he/she should use the new system. In cases where the social influence factor has no effect in the case of voluntary use. However, this factor becomes effective when the use of technology is mandatory (Ayaz & Yanartas, 2020). The social influence factor reflects the influence of influencing factors on the behaviour of users, such as opinions of friends or hierarchical superiors (Afonso et al., 2012).

Universiti Utara Malaysia

d. Facilitating Conditions

It refers to the available organisational support towards the system, including development, available resources and ICT infrastructure (Alshehri et al., 2019). In the context of this study, it is the individual perception of how well the organisation provides support in using the LMS. The facilitating conditions factor measures the technological and organisational infrastructures that contribute towards the users' familiarity with the LMS, rather than specific technical support.

e. Training

Training is defined as a learning process in which employees acquire knowledge, skills, experience and attitudes that they need in order to perform their job better for the achievements of their organisational goals (Sani Abdullahi et al., 2018). In the context of this study, it is the activities leading to the acquisition of new knowledge or skills to use the LMS.

1.9 The Organisation of the Thesis

This study consists of six chapters. Detailed breakdowns and explanations of the chapter are listed below:

The study's context, problem statement, research concerns, research goals, study significance, scope, study limitations, and thesis organisation are presented in chapter one.

Universiti Utara Malaysia

Chapter two presented Telekom Malaysia as the context of study. In this chapter, the background, history, journey and current status of Telekom Malaysia is shared.

Chapter three discusses an intensive review of relevant literature by offering theories and practices of UTAUT (User Test of Acceptance on Use of Technology), Knowledge Management (KM), Learning Management System (LMS), and Behavioural Intention.

Chapter four presents the theoretical framework of the study, research model including the Independent Variable (IV) and Dependent Variable (DV), Hypotheses, Research Design (purpose of research, study approach, unit of analysis, identifying population and sample, operational definitions, measurement of variables /instrumentation, questionnaire instrument) and statistical analysis procedures.

Chapter five presents the survey findings concerning using the Learning Management Systems (LMS) by the learners in Telekom Malaysia (TM). This chapter also explains how the researcher analyses the data gathered.

The sixth chapter of the thesis is devoted to a study of all the previous chapters. It includes an analysis of the implications, contributions, guidelines, and limitations of the study.

UUM
Universiti Utara Malaysia

CHAPTER 2

CONTEXT OF STUDY: TELEKOM MALAYSIA

2.1 Introduction

As the enabler of Digital Malaysia, Telekom Malaysia Berhad (TM) has been at the forefront of each telecommunication technology evolution of the nation, with a proud history of 75 years in nation-building. TM are the communications backbone of Malaysia, with the widest digital connectivity and infrastructure network.

2.2 Background of Telekom Malaysia Berhad (TM)

TM Group has grown into the nation's leading integrated telecommunications provider, as part of their continuous journey in enhancing and elevating the nation's telecommunications technology and services towards delivering connectivity to all Malaysians. As the enabler of Malaysia's Digital Nation aspirations, TM offers a comprehensive suite of communication services and solutions; from fixed, mobile, content, Wi-Fi, ICT, Cloud, Data Centre and Smart Services (Telekom, 2020). TM is driven by stakeholder value creation to deliver an enhanced customer experience via quality and innovative improvements. TM's motivation is to connect consumers and businesses nationwide to accelerate their digital transformation journey and realise their digital opportunities (Telekom, 2020).

Leveraging on their extensive global connectivity, network infrastructure and collective expertise, TM is well positioned to propel Malaysia as a regional Internet hub and digital gateway for South-East Asia. TM remains steadfast in its transformation into a new generation communications provider to deliver an enhanced and integrated digital lifestyle to all Malaysians, and opening up possibilities through

Universiti Utara Malaysia

connection, communication and collaboration, towards a shared vision of elevating the nation into a high-income economy (Hisham, 2019).

As a model corporate citizen committed to good governance and transparency, TM continues its pledge to ensure the integrity of their processes, people and reputation as well as the sustainability of their operations. TM Corporate Responsibility (CR) ethos reinforces responsible behaviour in the four main domains of the marketplace, workplace, the community and the environment. With a focus on ICT, the group further promotes 3 major platforms i.e. education, community/nation-building and environment, through their Reaching Out programmes (Hisham, 2019). TM looks forward to continue serving customers with comprehensive suite of offerings, delivering a seamless digital experience and integrated business solutions to meet the lifestyle and business communication needs - towards making "Life and Business Made Easier for a Better Malaysia" (Telekom, 2020).

Universiti Utara Malaysia

2.3 TM Vision and Mission

2.4 TM Organisation Chart

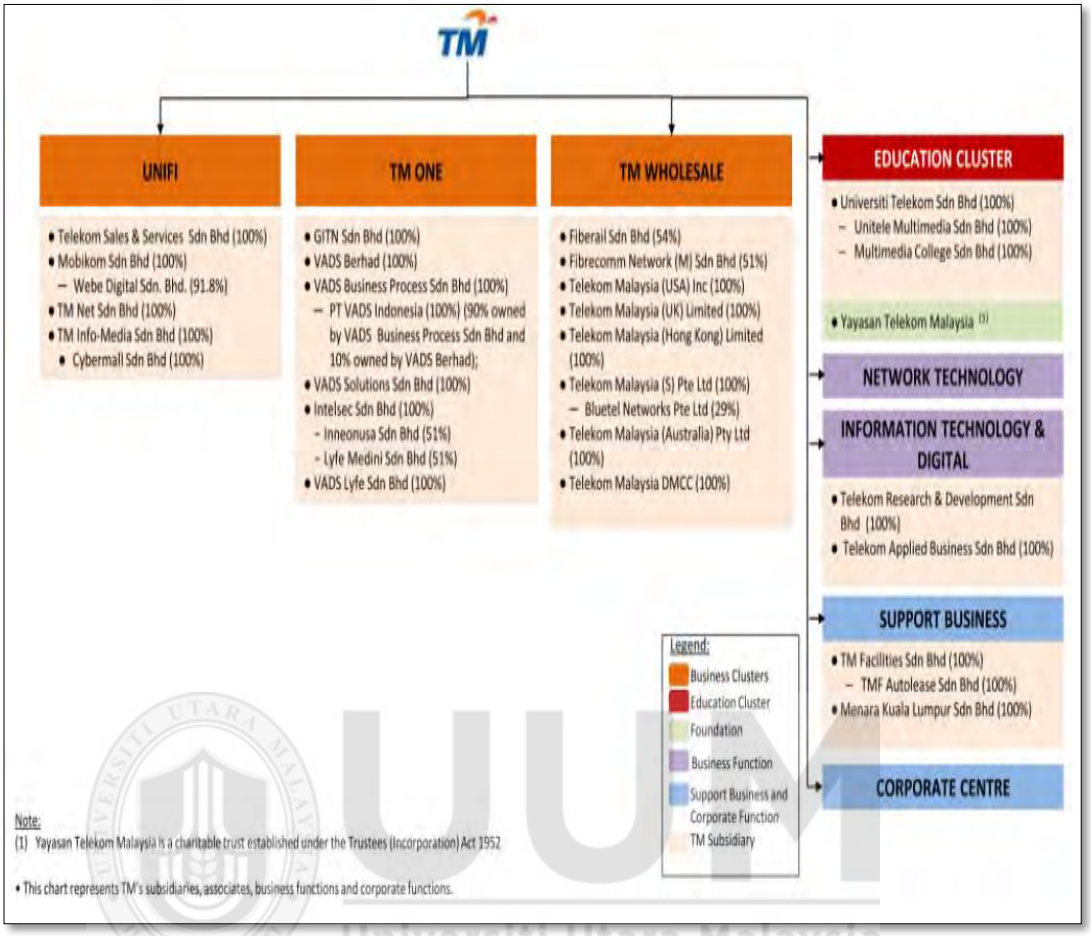

Universiti Utara Malaysia

TM organisation is divided into seven clusters which were UNIFI, TM One and TM Wholesale which was parked under the business cluster. Additionally, there were education cluster, foundation, business function, support business and corporate function and TM Subsidiary. TM has more than 22000 employees at the moment (Hisham, 2019). The respondent for this study is from the Information Technology and Network Technology (ITNT) unit which was clustered under the Business Function. The ITNT unit was selected because they were the front liners in TM with the largest number of employees (12030) and were the main target users of the LMS (Ahmad, 2018). As the frontliners of a technology base company, their knowledge must be kept in line with the fast pace of technology change.

2.5 Market Positioning

In Malaysia and most part of the world, telecommunications marketplace is changing rapidly. Telecommunication Company (telcos) must remain responsive in order to keep up. To remain relevant, telcos cannot simply offer the same things as every other player. They must differentiate themselves by investing in the business intelligence necessity to understand consumer wishes before their competitors, and then use that knowledge to build good customer relations and create sense of loyalty among the customers that other player cannot match, such as enhanced support team performances.

As one the largest Telecommunication provider in the country, TM realised these situations. Moreover, looking at the annual report by MCMC, TM realised that it is losing its grip on the market place (Malaysian Communications and Multimedia, 2020). Slowly, but surely the number are starting to move to the downfall area. Something needs to be done, and it has to be done quickly. Not wanting to be left behind, Telekom Malaysia is doing everything to ensure its existence as one of the major market share holders.

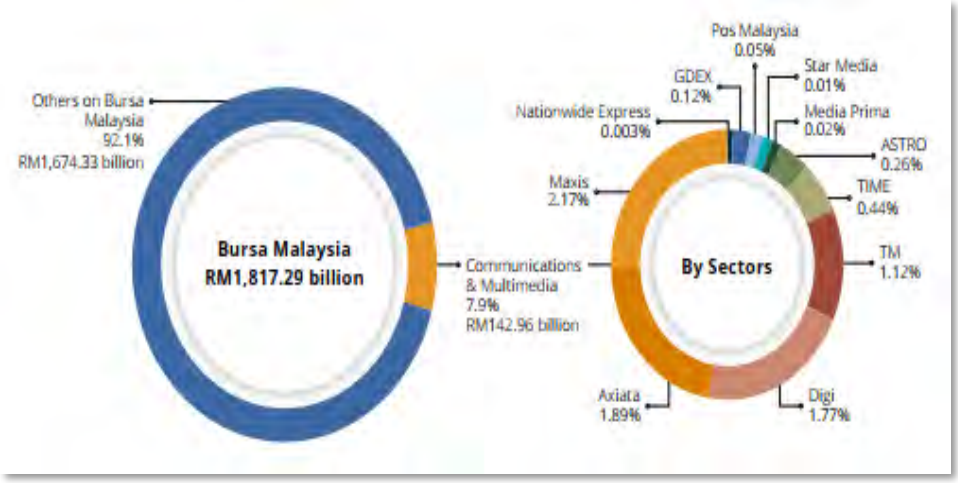

Figure 2.1
Market Share Contribution to Bursa Malaysia.
Source: MCMC Industry Annual Report (2020)

Company	Market Capitalisation (RM billion)			Change (%)	
	2020	2019	2018	2020 – 2019	2019 – 2018
Maxis	39.51	41.61	41.82	-5.0%	-0.5%
Axiata	34.29	37.94	35.65	-9.6%	6.4%
Digi	32.19	34.68	34.99	-7.2%	-0.9%
TM	20.42	14.38	10.00	42.0%	43.8%
TIME	8.01	5.40	4.73	48.3%	14.2%
Telecommunications	**134.42**	**134.01**	**127.19**	**0.3%**	**5.4%**
ASTRO	4.72	6.62	6.78	-28.7%	-2.4%
Media Prima	0.32	0.31	0.38	3.2%	-18.4%
Star Media	0.25	0.36	0.51	-30.6%	-29.4%
Broadcasting	**5.29**	**7.29**	**7.67**	**-27.4%**	**-5.0%**
Pos Malaysia	0.95	1.16	1.35	-18.1%	-14.1%
GDEX	2.25	1.52	1.48	48.0%	2.7%
Nationwide Express	0.05	0.03	0.04	66.7%	-25.0%
Postal and Courier	**3.25**	**2.71**	**2.87**	**19.9%**	**-5.6%**
TOTAL C&M	**142.96**	**144.01**	**137.73**	**-0.7%**	**4.6%**

Figure 2.2
Market Positioning by Industry.
Source: MCMC Industry Annual Report (2020)

From the pole position in the telecommunication industry, TM now is labelled at number four in the country. Based on this situation TM has embarked on a transformation journey to uplift the company performance to its previous glory.

2.6 Transformation Journey.

Since 2015, TM has submitted to gradual transformations. The Transformation journey is targeted to bring up TM positioning in the telecommunication industry market share in Malaysia. The transformation programme includes the restructuring and movement of TM employees nationwide. In the transformation, a structured training programme has been designed to cater for all the level of TM employees starting from behavioural training to digitalisation programme as well as customer-facing activities into a more digital- based experience. TM believes that this will benefit both the customers and the organisation in the long run (Mohamed, 2016).

Most importantly, the transformation is set to differentiate TM from the competitors. TM is cultivating a service culture and mindset that is designed around the philosophy of their organising principle, Life and Business Made Easier, and brand values of being Easy, Trusted and Innovative (TM Annual Report, 2016).

Universiti Utara Malaysia

Chairman of TM, Tan Sri Mohd Bakke Salleh said the telecommunications company has embarked on the transformation programme to create greater shareholder value and continuously enable a more digital Malaysia. "Guided by our compass of purpose, customers, performance and people, we will focus on connectivity excellence, solutions excellence and customer experience excellence to set us apart from the competition," (Bernama, 2021). Additionally, Mohd Bakke said that TM is reshaping its workforce to become a stronger execution engine, embracing a more agile work culture with future-ready skills (Bernama, 2021).

To run the transformation programme, a massive knowledge transfer activity must be done. In ensuring TM employees are well equipped with the required knowledge, TM

is utilising the knowledge management concept with the help of a knowledge management tools known as the Learning Management System (LMS).

2.7 Knowledge Management in TM

It was the brilliant idea of Tun Dr. Mahathir Mohammad in 1991 to spark the knowledge management agenda in Malaysia. The fourth Prime Minister of Malaysia stresses the importance of Knowledge-Based economy to the nation economic wellbeing. The initiatives began to gain its momentum with the formation of the Multimedia Super Corridor (MSC) and its flagships (1996) along with the Knowledge Economy Master Plan. In supporting the national agenda, Knowledge Management (KM) initiatives were set up at numerous government link company (GLC) including Telekom Malaysia (Ramin et al., 2013). This is where the journey of KM started in Telekom Malaysia. As a former government department, Telekom Malaysia inherited everything from Jabatan Telekom Malaysia including the systems, technologies, business network, customers and its 28,000 thousand employees. Telekom Malaysia has become one of the most important knowledge-based organisations in the country. Therefore, the achievement of Telekom Malaysia is critical for supporting the growth as well as prosperity of the nation (Nor & Nor, 2008).

As a company that belief knowledge is the key to success, TM has provided tailored learning path for each employee at every level within the organisation with a customised portfolio of courses in the areas of strategy, business and leadership (Telekom Malaysia, 2014). Telekom Malaysia, from the beginning of the knowledge management agenda had implemented a few Learning Management System (LMS) to aid in the delivery of knowledge to its employee. The first LMS implemented by TM was called “People Soft” followed by “Training Resources Information System

(TRIS)" and the current LMS named "Learning Solution (LSO)". The latest LMS in the process of implementation now is called "Digital Learning Solution" or LEARN in short.

2.8 Digital Learning Solution (LEARN)

The Digital Learning Solution or LEARN in short is a knowledge management project initiative under TM Learning & Development (L&D) unit. The aspiration of this initiative is to inspire people to learn using new technologies and digitalised training. TM Learn offers comprehensive and personalised Digital Learning Solution exclusively for TM employee to boost their knowledge, skills and get certified; anywhere, anytime, any device.

With LEARN, learners will be able to acquire knowledge at their own time and pace and at their own comfort. With the everchanging technologies, smart devices will become an enabler to connect knowledge and learners.

Universiti Utara Malaysia

Figure 2.3
TM LEARN Landing Page
Source: TM LEARN Portal

With LEARN, learners will be able to immerse themselves with the current advancement through smart learning approach. LEARN will facilitate the communication between smart devices, smart panels and smart application via multi platforms. Learners will experience each byte of digitisation and digitalisation component that during the pre-training up to post training stages.

UUM Universiti Utara Malaysia

CHAPTER 3

LITERATURE REVIEW

3.1 Introduction

This chapter will include a summary of the published literature on the three areas on which this study is focused: learning management systems, behavioural intention, and technology adoption theories and models. These overviews help those unfamiliar with the topic to recognise and understand this research's essential parts. First, the chapter defines a learning management system (LMS), explains its features and functions, compares commercial and open-source LMS, and summarises the advantages and disadvantages of LMS. Second, the chapter incorporates additional literature on behavioural intention to use LMS with definitions of intentions among learners in Telekom Malaysia (TM). Finally, this chapter briefly introduces a few technology acceptance theories, explores the rationale for extending UTAUT theory to include users' concerns, and explains how this study's hypothesis was developed.

Universiti Utara Malaysia

3.1.1 Learning Management Systems

Learning management systems were first implemented in the 1990s (Oliveira et al., 2016). Many academic institutions have implemented learning management systems (Dahlstrom et al., 2014), and they are the predominant framework used by higher-educational institutions around the world (Binyamin, 2019; Divan et al., 2017). The subsections below provide more information about LMS, including its meaning, features, benefits, and drawbacks.

3.1.2 Definition of Learning Management Systems

Learning and education have been influenced by the growth of information and communication technology (ICT). New terminology in learning and education technology has arisen as a consequence of ICT, including e-learning systems, learning management systems (LMS), virtual learning environments (VLE), and computer-based training systems (CBT). Researchers use different terms for different technologies (Binyamin, 2019; Moore et al., 2011). According to a mixed-method review, terminology for different technologies is inconsistent. These contradictions illustrate the significance of defining the distinctions between newly coined e-learning words.

E-learning systems, to begin with, are technical systems that provide individuals with online access to education (Islam, 2013). As a result, the term "e-learning systems" is broad and can refer to any system that delivers education to learners over the internet, such as a learning management system (LMS) or a virtual learning environment (VLE) (Martín-Blas & Serrano-Fernández, 2009). An LMS, on the other hand, is a multi-featured web-based learning platform that enables educators to develop course materials and learning experiences while students focus on their assignments (Divan et al., 2017). This description indicates that a Learning Management System (LMS) is an e-learning system used to manage the delivery of e-learning courses. User registration, announcements, email, forums, assignment submission, quizzes, course material, and calendars are examples of learning management system tools used to help organise courses (Kabassi et al., 2016). LMS software includes Blackboard, Moodle, and Sakai.

Based on the functions implemented into the system, researchers describe learning management systems in several ways. Teachers use learning management systems (LMS) to develop, amend, and maintain course materials online (Ghazal et al., 2018). According to Hussein and Khan (2015), a learning management system (LMS) is a software that is used to coordinate educational processes and activities. LMSs are web-based systems that enable instructors to build course materials, distribute information, and assess student progress (Tey & Moses, 2018).

Academic schools and other organisations are now using a variety of learning management systems (LMS) for education and training. Learning Management Systems (LMS) aren't always created equal (Binyamin, 2019). It has different characteristics depending on which LMS you use (Alharbi & Drew, 2014). As a result, LMS can be classified based on a variety of factors, including cost and location. One of the most important things to consider when choosing an LMS is the system's functionality. To prevent the high cost of LMS, some organisations prefer to use an open-source platform or develop their own (Aydin & Tirkes, 2010).

Open-source LMS users benefit from a low-cost service because the source code is available. Users of an open-source LMS have the freedom to use and modify the framework (Chaubey & Bhattacharya, 2015). As a result, the platform can be customised to the needs of businesses (Kasim & Khalid, 2016). On the other hand, open-source LMS necessitates a considerable amount of customisation (Hasan, 2019). Since open-source LMS are often more complex than commercial LMS, even minor customisations require the use of experienced users (Machado

Universiti Utara Malaysia

& Tao, 2007). Organisations should not consider open-source systems to be free since they must hire technical staff or pay for assistance (Binyamin, 2019).

Conversely, proprietary LMS (commercial) is more costly than open-source LMS (Binyamin, 2019). Despite the fact that proprietary LMS provides better technical support than open-source LMS, businesses that use proprietary LMS must make financial investments (Raman et al., 2014). Kasim and Khalid (2016) compared proprietary and open-source LMS and found that proprietary LMS needs an annual licence purchase and support and maintenance fees for each user. LMS is typically viewed in a number of formats, each from a unique perspective. Local LMS systems are those that are implemented locally on the premises and servers of companies of this kind. Typically, organisations are responsible for providing technical assistance for local LMS.

On the other hand, LMS can be provided as a cloud-based solution or as a software as a service (SaaS). LMS is hosted on vendor servers in this group, and users must link to LMS through the Internet (Masud & Huang, 2012). Suppliers of the SaaS LMS will provide all support, maintenance, and updates (Chaubey & Bhattacharya, 2015).

3.1.3 Advantages of Learning Management Systems

A learning management system gives students more control and flexibility by allowing them to learn anytime and from any place (Chaubey & Bhattacharya, 2015). In typical classes, students are required to attend class at a certain time and in the same geographic area for a certain amount of time. LMS provides students with a simple way to tackle conventional learning's physical and time limitations (Binyamin, 2019). Swart (2016) believed that a learning management

system (LMS) could create, support, convey, and facilitate learning without regard to time or location constraints. The most prominent LMS feature (Chaubey & Bhattacharya, 2015) is this benefit, which is particularly important for students studying and working long hours (Binyamin, 2019). As a result, such programmes ensure that people have equal access to learning opportunities at all times and in all places (Hassanzadeh et al., 2012).Uziak et al., (2018) performed an observational analysis on the use of Blackboard by 275 university students in Botswana. Students accepted that Blackboard enhances learning efficiency by optimising time, organising learners, performing assignments more efficiently and effectively, delivering information in an organised manner, comprehending materials, and strengthening relationships between students and instructors. According to a study conducted in the United States (Dahlstrom et al., 2014), 74% of teachers found LMS useful, 71% agreed that LMS enhances student learning, and 60% said LMS is needed for teaching activities.

Universiti Utara Malaysia

3.1.4 Disadvantages of Learning Management Systems

Despite the advantages of LMS in the past, some scholars have a different viewpoint on it. The new LMS is not without defects (Althobaiti & Mayhew, 2016). Other studies have reported that such a device has usability issues related to its users (Althobaiti & Mayhew, 2016; Binyamin, 2019; Hasan, 2019). As a consequence of the system's low learnability, a unusable LMS diverts students' attention away from the material, necessitates more effort and time, increases student frustration, and forces students to focus on using the system rather than the content (S. Ali et al., 2018). Furthermore, using a learning management

system (LMS) necessitates the ongoing training of instructors, students, and administrators to improve their technological abilities (Amer et al., 2013).

3.1.5 Barriers and Challenges for LMS acceptance.

Despite the benefits of LMSs, they also have major drawbacks that create barriers for easy and smooth utilisation. Alenezi (2018) in a study to identify various barriers that have hindered the acceptance of LMSs in Saudi Arabian universities administered 150 questionnaires to students in three universities in Saudi Arabia. Findings from the study revealed that the main barriers to the use of LMSs were inadequate technical support by the universities, negative attitude toward technology and inadequate training on the LMS platforms. Minor barriers identified include poor Internet access and networking, limited infrastructure to support the LMS, lack of hardware and software to run the LMS, and challenges in English language proficiency.

Universiti Utara Malaysia

presence of specific barriers can create difficulties that prevent users from reaping the benefits of the systems. Poor Internet connectivity is one of the major barrier to users in most developing countries (Alenezi, 2018). Given that LMSs only work online, good Internet connection is a necessity. Poor connectivity slows down learning processes and tampers with features such as online conferencing, which only work with strong networks. In his research, Alenezi (2018) also reported that the main challenges of LMSs acceptance are a lack of or inadequate training and support, software issues that disrupt classroom teaching, blocked websites, and infrastructure failure in the universities. Other barriers that the was reported include incompatibility of IT systems, poor

management of technology implementation, and a lack of high-quality technical support staff (Alenezi, 2018).

Some of the barriers mentioned in the study of Alenezi (2018), can be related to the contributing factor for LMS acceptance in the UTAUT model. For instance, infrastructural issues and technical support is equivalent to facilitating condition, cultural and moral discourse can be influenced by social influence. Inadequate training and support are also mentioned in the study of Alenezi (2018) as the main challenges for LMS acceptance.

In another study by Radovan and Kristl (2017), they found that the crucial factor for LMS acceptance among users is the immediate social influence at work, but the formation of the learning process largely depends on the characteristics of the LMS tools and the perceived usefulness of the application. In a study by (Snoussi, 2019) in a higher education of UAE, the respondents pointed out that although students are technology savvy in general, some of them are enable to use some software related to LMS, and therefore cannot follow the faculty's instructions and honour their duties on the LMS. Additionally, all participants claimed that their respective universities offer series of training courses for new students at the beginning of each semester, but rapid technological developments make all parties confused at times (Snoussi, 2019). The findings of this study suggested that training for the LMS must be conducted regularly and in continuance.

Additionally, Almaiah and Alyoussef (2019) studied the factors influencing the acceptance and use of LMS among educators and learners through a qualitative approach by conducting interviews. The result revealed that trust factors (trust of

internet, security, digital signatures, electronic payment, law, and regulations), LMS quality factors (efficiency, useful-ness, ease of use, reliability, content design), self-efficacy factors (awareness, training programmes), and cultural factors (ICT literacy, e-society, social media) were the key factors that have highly affected the use of LMS among both educators and learners. According to Almaiah and Alyoussef, 2019), course design, course content support, course assessment, performance expectancy, and facilitating conditions were the key influencing factors affecting the actual use and use behaviour of LMS among students at King Faisal University (Almaiah & Alyoussef, 2019).

Recent research by Thongsri et al., (2020) studied the difference in perception and behaviors of STEM (science, technology, engineering, and mathematics) and non-STEM students. The findings revealed that computer self-efficacy and perceived usefulness of LMS are major factors influencing the acceptance of E-learning between both STEM and non-STEM students. They concluded that non-STEM students are more at risk of missing the E-learning benefits. Another study in the context of Iraq has found out that perceived usefulness, perceived ease of use, subjective norms, quality of information, quality of the system, technical support, and self-efficacy have a major influence on behavioural intention to use E-learning systems among students (Ameen et al., 2019).

Universiti Utara Malaysia

Based on the findings of prior and recent research, it was identified that most of the influencing factors of the LMS acceptance is similar to the construct of the Unified Theory of Acceptance and Use of Technology (UTAUT) theory that was developed by Venkatesh et al., (2003). Additionally, the factor of training was also mentioned in most recent study of LMS acceptance as one of the main factors contributing to the acceptance of the LMS (Alenezi, 2018; Ameen et al.,

2019; Snoussi, 2019; Thongsri et al., 2020). Different terminology may be used in different studies, however, based on the explanation that was provided in each of the study, it can be concluded they carry the same meaning. For example, table 3.1 below portray the similarities of the terminology used by different studies compared to UTAUT terminology.

Table 3.1

Terminology Differences Between Studies

Author	Terminology	UTAUT
Alenezi (2018).	Poor Internet access and networking.	Facilitating Condition
	Limited infrastructure to support the LMS.	
	Lack of hardware and software to run the LMS.	
	Inadequate training and support.	Training
Radovan and Kristl (2017)	Immediate social influence	Social Influence
Snoussi (2019)	Training	Training

Table 3.1 continued

Almaiah and Alyoussef (2019)	Efficiency, usefulness, ease of use, reliability, content design	Ease of use
	course content support	Facilitating Condition
	performance expectancy	Performance Expectancy
	facilitating conditions	Facilitating conditions
Ameen et al., (2019)	perceived ease of use	Effort Expectancy
	technical support	Facilitating conditions

Universiti Utara Malaysia

Based on findings of recent prior research, it is concluded that the UTAUT construct is still very much valid for the use of identifying the factors that contributes to the LMS acceptance. Additionally, training was also mentioned to be an important factor for LMS acceptance. Hence, the selection of the UTAUT model with an extension of training in this study is justified.

3.2 Technology Acceptance Theories

One of the most significant areas of academic research has been the acceptance and usage of technology (Binyamin, 2019). Many hypotheses and models have been suggested over the years to understand people's technological adoption behaviour. These theories are almost identical in structure but vary in how they describe technology's behavioural intentions. These theories were created to investigate how people embrace technology and demonstrate their ability to adapt to new technology. They are focused on psychological and sociological concepts of behavioural science and their effect on technology use. These hypotheses have evolved over time and are the product of each other's extension.

The following are some of the popular and well-known theories:

1) TRA (Theory of Reasoned Action) (Ajzen & Fishbein, 1980)
2) TPB (Theory of Planned Behavior) (Ajzen, 1985)
3) DTPB (Decomposed Theory of Planned Behavior) (Taylor and Todd, 1995c).
4) TAM (Technology Acceptance Model) (Davis, 1986),
5) TRA (Theory of Reasoned Action) (Fishbein and Ajzen, 1967)
6) TAM2 (Venkatesh and Davis, 2000).
7) C-TAM-TPB (Combine TAM and TPB) (Taylor and Todd, 1995a).
8) MPCU (Model of PC Utilisation) (Triandis, 1979),

9) IDT (Innovation Diffusion Theory) (Rogers, 1983),

10) MM (Motivational Model) (Deci and Ryan, 1985).

11) SCT (Social Cognitive Theory) (Bandura, 1986)

All technology acceptance theories aim to measure individual user's levels of acceptance and satisfaction with any technology or information system, but from different viewpoints depending on the mechanisms or determinants that represent the system's structure.

Individuals' attitudes and acceptance capacity to embrace emerging technology have been addressed in the hypotheses and models described above, based on certain constructs and variables. The psychological and behavioural perspectives of technology users were the subject of these theories (Binyamin, 2019). However, each theory has its own set of limitations and structures thought to be the driving force behind its growth (Momani et al., 2017). TPB, DTPB, and TAM ideas, for example, are all derived from the TRA. However, there are still some flaws in these ideas. Acceptance theories, according to Binyamin (2019), have two main weaknesses. First, each theory's framework uses different terminologies, but the principles are the same. Second, no single theory can account for all behavioural triggers due to the complexity of behaviour analysis and the weaknesses of researchers. To put it another way, each theory has flaws of its own and does not support the others (Binyamin, 2019).

3.2.1 The Unified Theory of Acceptance and Use of Technology (UTAUT)

UTAUT theory is being used as a foundation for the present analysis. As a result, this section provides a summary of the Unified Theory of Acceptance and Use of Technology (UTAUT) and discusses how the researcher modified it to suit the learners' situation. After that, the researcher goes through the UTAUT constructs

and the newly implemented variable used to extend UTAUT. UTAUT was created by Venkatesh et al., (2003) as a systematic synthesis of previous technology acceptance research based on a literature review. The four key constructs in UTAUT that influence behavioural intention to use technology are Performance Expectancy (PE), Effort Expectancy (EE), Social Influence (SI), And Facilitating Conditions (FC). These UTAUT structures and definitions are adapted to the learners' technology adoption and usage scenarios.

According to UTAUT, behavioural intention to use technology is influenced by performance expectancy, effort expectancy, and social influence, while behavioural intention and facilitating conditions decide the technology use. Individual differences, such as age, gender and experience, are used as demographic details only in this analysis, and all moderators are excluded. The reason for not considering these items is that this study focuses on Telekom Malaysia employees regardless of their demographic differences. The researcher then goes through the UTAUT constructs as well as the newly added constructs. Furthermore, since the technology in (LMS) is still in development, this study will focus solely on the relationship between the constructs and the intent rather than the technology's actual use.

Universiti Utara Malaysia

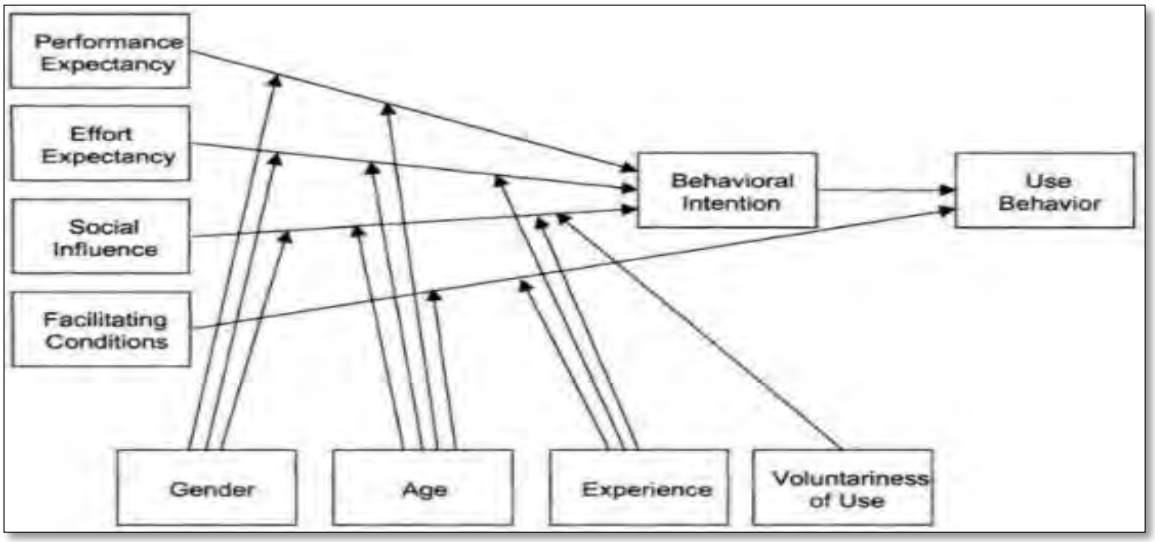

Figure 3.1
Original UTAUT model (Venkatesh et al., (2003)

3.2.2 Justification for the use of UTAUT in the current study

Venkatesh et al. (2003) UTAUT model is used in this analysis for many reasons.

1) UTAUT was developed using eight different theoretical models (TRA, TAM, TPB, Motivational Model (MM), combined TAM and TPB (C-TAM-TPB), Model of PC Use (MPCU), IDT, and Social Cognitive Theory (SCT)) (Venkatesh et al., 2003). As a result, it is more fitting to use several theories as an underpinning theory for the current study by combining them under UTAUT.
2) In measuring behavioural and acceptance, the UTAUT model is more versatile than previous individual theoretical models. In addition, UTAUT is said to be able to predict information technology implementation in around 70% of cases. In contrast, other user acceptance models (TRA, TAM, and TPB) could only do so in about 40% of cases (Venkatesh et al., 2003).

Universiti Utara Malaysia

3) In this analysis, UTAUT considers four important factors: Performance Expectancy (PE), Effort Expectancy (EE), Social Influence (SI), and Facilitating Conditions (FC). These variables are considered important determinants of users' intentions and behaviour regarding technology (Al-Shafi & Weerakkody, 2009; Venkatesh et al., 2003).
4) In technology integration trials in various environments, UTAUT has been proven to be successful (Raman et al., 2015). UTAUT has been proven to be a basis for a robust diagnostic approach to assess if applicable information meets the user's needs by several researchers (Al-Shafi & Weerakkody, 2009; Faaeq et al., 2014). Venkatesh and Davis (2003) tested the UTAUT model in the private sector in the United States, which is close to the current research.
5) UTAUT is a synthesised model that provides a more complete picture of the acceptance process than previous individual models. Despite its newness, the UTAUT model is suitable and accurate (Suha & Anne, 2008).

Factors form the nucleus of the current research, aiming to identify the key factors influencing LMS intention behaviour among TM employees. In a similar vein, the ideas that UTAUT is based on are examined to understand better the role of their frameworks in user adoption of new technology. UTAUT appears to be the most effective method currently available when it comes to presenting intention and use. In TM, UTAUT has developed the most reliable method for determining LMS use intentions. Furthermore, Alvesson and Kärreman (2007) stated that exploring theories in new ways can lead to further information. As a result, this research used UTAUT to look at learners' intentions to use the LMS in TM.

Universiti Utara Malaysia

3.2.3 The Theoretical Framework

Building on the introduction's discussion, the researcher presents an overview of the constructs added to UTAUT and discusses the constructs' details. A graphical view of the relationships among these variables, otherwise known as the theoretical framework, is now presented. "A conceptual model of how one theorises makes logical sense of the relationships among several factors that have been established as relevant to the problems" is how a theoretical framework is described (Sekaran, 2013). As shown in Figure 2.2, the proposed research structure depicts the overall definition of the study.

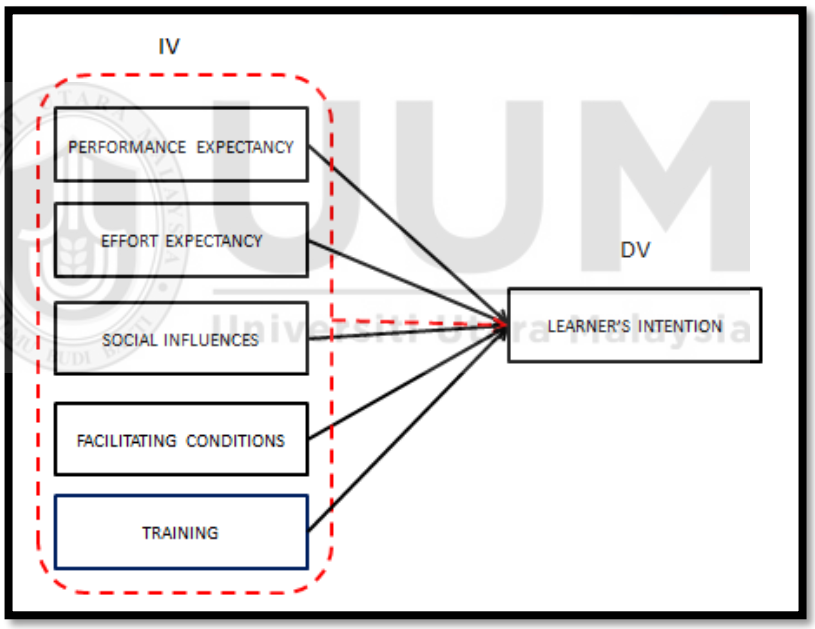

Figure 3.2
The theoretical framework for this study

The study's framework is a simplified version of the UTAUT, which is an adaptation of Venkatesh's original structure of the "Unified Theory of Acceptance and Use of Technology" (UTAUT) (2003). A theoretical framework is a logical foundation of the interrelationships among several variables (independent,

moderating, mediating, and dependent) identified through theories and literature review to arrive at reasonable solutions to the problem statement. Moreover, it provides a solid base for developing the hypotheses and measurement instruments (Sekaran, 2013). For this analysis, the simplified UTAUT model was chosen as the basis. It carries the same characteristic of the original UTAUT that covers both organisational and individual factors, and it combines elements from several prominent technology acceptance models (A. Chauhan & Amelia, 2017).

The simplified version of UTAUT has been validated via a quantitative study to examine the factors contributing to the low usage of a particular mobile application in Indonesia (Chauhan & Amelia, 2017). The moderating effects of gender, age, experience, and voluntariness in the context will not be included in this study, as recommended in their report. The exclusion is focused on the study's goal of better understanding the phenomenon of low LMS use. Therefore, the inclusion of moderation is deemed beyond the scope of this study. Additionally, the moderator's use in the original UTAUT is not warranted (Chauhan & Amelia, 2017). Furthermore, "Use Behaviour" that was a part of the original UTAUT dependent variable was also dropped in this study. Use behaviour was not included in this study because the new LMS in TM is still in the implementation stage and not open for common use by the employees. Therefore, actual usage of the LMS cannot be captured.

Universiti Utara Malaysia

3.3 Review on the Conceptual Model Variables

3.3.1 Performance Expectancy

Individuals' expectations that using a device would increase their job efficiency to perform different tasks are referred to as Performance Expectancy (PE) (Venkatesh et al., 2003). It's the same as Technology Acceptance Model (TAM) perceived usefulness and Innovation Diffusion Theory (IDT) relative benefit. According to numerous studies, performance expectancy (PE) is a major determinant of behavioural intention (BI) to use an e-learning process (Alrawashdeh et al., 2012). Venkatesh et al. (2003) noted in their original conception of the UTAUT model that this feature is the best predictor of the user's behavioural intention. Performance expectancy is a significant predictor of behavioural intention, according to Venkatesh et al. (2003). According to Dulle and Minishi-Majanja (2011), who investigated open access adoption in Tanzania, and Almaiah et al., (2019), who investigated mobile learning adoption in Jordan, the degree of importance, however, varies between studies.

Raman et al., (2015), in their study investigating the technology acceptance level through UTAUT model among secondary schools' students from Kual Muda District in Malaysia revealed positive relation between behaviour intention and performance expectancy in using e-learning platform. The same outcome were also reported by Lakhal and Khechine (2016), in their study to examine the predictive value of some factors on acceptance and use of desktop web-conferencing by students in a blended course, and according to course delivery modes, in higher education.

Universiti Utara Malaysia

Performance Expectancy was also found to be significantly influencing behavioural intention in another study determining the key factors influencing elderly users' intention to adopt and use the mHealth services in Bangladesh (Lakhal & Khechine, 2016). Baishya et al., (2017) in their study investigating the factors predicting students' intention to use the LMS at postgraduate school, University Putra Malaysia indicated that performance expectancy was significantly related to the students' intention to use the LMS.

On the other hand, Marchewka and Kostiwa (2007), discovered that performance expectancy had no effect on behavioural intention. This was found in a Taiwanese study that looked at students' impressions of courseware management tools. Performance expectancy was also found ineffective in predicting behavioural intention in research by Van Dijk et al., (2008), which examined the factors influencing e-government adoption in Netherland. In a more recent study by Alshehri et al., (2020) investigating the impact on students' intention and use of the LMS using UTAUT, the study demonstrated that performance expectancy displayed a robust effect on the students' intention to use an LMS. This study is supported by another recent study by Li and Zhao (2021) in their effort to analyse the factors influencing the continued intention to use the online learning classes by students in China. The result of the research showed that performance expectancy have a significant impact on the continued intention to use online learning classes (Li & Zhao, 2021).

Taken together, there is clear evidence in the literature and theory that performance expectancy is significantly related to behaviour intention. Based on the above submission, empirical evidence suggests that performance expectancy is important in influencing the behaviour intention of the LMS user. Therefore,

Universiti Utara Malaysia

it is hypothesised that the learners in TM will have a positive attitude toward the LMS if they believe it will help them increase their operational performance. Based on these discussions, it is hypothesised that:

H1: There is a significant and positive relationship between performance expectancy and learners' intention to use LMS.

3.3.2 Effort Expectancy

The learners' expectation that the system will be simple to use, error-free and hassle-free is known as Effort Expectancy (EE) (Venkatesh et al., 2003). It is similar to the perceived ease of use of TAM and the complicated structure of IDT. It determines how much time and effort learners expect to devote to using the LMS in this situation. Using data from various sources, an important association between effort expectation and behavioural intention to use LMSs has been discovered (Abel et al., 2014; Alrawashdeh et al., 2012). This connection can be seen in voluntary and mandatory scenarios, particularly in the early stages of learning (Venkatesh et al., 2003). It was shown that after a long period of continuous use, the effect became less strong (Venkatesh et al., 2003).

According to surveys conducted by Almaiah et al., (2019), the effort expectation is a major determinant of the intention to use an LMS. It positively affects a web-based learning environment Bellaaj et al., (2015). Additionally, Hoque and Sorwar (2017), in their study to develop mHealth services for elderly users using UTAUT proved that adoption of the services is positively affected by effort expectancy.

Universiti Utara Malaysia

In a more recent study by Alshehri et al., (2020a) that investigates the impact on students' intention and use of the LMS using UTAUT in the Kingdom of Saudi Arabia, they found a significant link between Effort Expectancy and user intention. This was further supported by the study of Li and Zhao (2021) in their study to analyse the factors influencing the continued intention to use the MOOCs by students in university in China.

However, the relationship between effort expectancy and intention to use has not always been positive. In a study by (Slade et al., 2015) to investigate consumer adoption of proximity mobile payments in England by applying UTAUT2 model with two additional variables, it was found that intention to use were not significantly affected by performance expectancy. This findings is supported by the study of Rahmaningtyas et al., (2020), in their effort to analyse the source of the problems that affected use behaviour in an Indonesian university, by exploring the factors of UTAUT. The results demonstrated that the direct effect test showed that effort expectancy had no effect on use behaviour. However, the frequency of effort expectancy having no relation to intention to use is lesser than it having a significant relation (De_Labriolle, 2020).

Universiti Utara Malaysia

Taken together, it is evident that user's positive perception of effort expectancy is a determinant for having the right intention towards technology acceptance and usage. Based on the above assertion, empirical evidence suggests that effort expectancy is important in promoting user's intention towards technology acceptance. As a result, it is expected that TM workers would use the LMS if they think it is simple to use. Therefore, it is hypothesised that:

H2: There is a significant and positive relationship between effort expectancy and learners' intention to use LMS.

3.3.3 Social Influence

Whether or not influential individuals (friends, colleagues, and family members) have an impact on an individual's decision to use a tool is referred to as social influence (SI) (Venkatesh et al., 2003). Though Social Influence (SI) was not included in the original TAM model, it is close to the Theory of Reasoned Action's (TRA) subjective norm. The importance of including a social dimension in the model, such as the views and opinions of the individual user's family, is recognised by UTAUT. The influence is likely to be better in the early stages of the user's LMS experience. When people are more open to other people's views, the influence is stronger (Venkatesh et al., 2003). According to the theory, social influence is insignificant in voluntary settings. The impact is greater where the use of technology is mandated, particularly in the early stages of experience (Venkatesh et al., 2003). Many studies have discovered a connection between SI and the desire to use LMS in education (Khechine et al., 2014).

Ali et al., (2016), in their study to explain the factors affecting students' acceptance and usage of computer supported collaborative classrooms in a hospitality and tourism school based on the Extended Unified Theory of Acceptance and Use of Technology (UTAUT2) model in Malaysia, found that social influences as one critical factor in determining behavioural intention. In the study of Baishya et al., (2017) to investigate the factors predicting students' intention to use the LMS at postgraduate school at University Putra Malaysia, it showed that social influence had a significant relation to students' intention to

use LMS. In 2020, they conducted another study exploring and discussing the adoption of smartphones in India and it was concluded that social influence predict the user intention (Baishya & Samalia, 2020).

Arif et al., (2018), in their study aimed to investigate factors affecting students' use of Allama Iqbal Open University's (AIOU) Web-based services by using the Unified Theory of Acceptance and Use of Technology (UTAUT) from the perspective of Pakistani distance education, showed that social influence is significant predictors of student behavioural intention to use AIOU Web-based services. These findings are supported by a recent study by Li and Zhao, (2021) in their study to analyse the factors influencing the continued intention to use the Massive Online Open Classes (MOOCs) by students in China, which showed that social influence has a significant impact on the continued intention to use MOOCs. Drawing from this assertion, it is argued that social influence has the ability to enhance user intention towards LMS adoption. Therefore, the following hypotheses are advanced:

Universiti Utara Malaysia

H3: There is a significant and positive relationship between social influence and learners' intention to use LMS.

3.3.4 Facilitating Conditions

Facilitating Conditions (FC) are characterised as factors in the environment that observers agree to simplify to perform a task (Keong et al., 2012; Venkatesh et al., 2003). FC can be the factors that are directly involved in using a system or a technology, including the technical infrastructure, technical support, and the environment for using the Learning Management System (LMS) (Akbar, 2013;

Lee et al., 2016). In this context, individual views of how well the organisation supports LMS use are critical. The facilitating conditions aspect evaluates the technological and organisational infrastructures that contribute to users' familiarity with the LMS rather than providing significant technical assistance. The construct consists of the organisation's accessible Information and Communication Technology (ICT) infrastructure, such as laboratories, and continuity with existing systems (Buchanan et al., 2013; Venkatesh et al., 2003).

It assesses whether people have the necessary personal knowledge and institutional resources to use the system. The system also checks for compatibility between the newly deployed LMS and the organisation's existing systems. While the original UTAUT only shows how FC affects actual usage, other UTAUT meta-analysis studies have shown that FC has a significant effect on behavioural intention (Dwivedi et al., 2019).

Ma et al., (2016), in their study to investigate the personal factors affecting smartphone technology acceptance by elderly Chinese adults, indicated that facilitating condition is a significant predictor toward users' intention. Facilitating condition was also found to be a significant factor influencing behavioural intention to adopt technology usage in a study conducted in Malaysia (F. Ali et al., 2016). This result is supported by Baishya and Samalia (2020) in their study conducted in Malaysia University which indicates that facilitating condition have a significant relationship with the students' intention to use an LMS. Recently, a study conducted in China to analyse the factors influencing the continued intention to use the MOOCs by students also showed that facilitating conditions have a significant impact on the continued intention to use MOOCs (Li & Zhao, 2021).

Taken together, it is evident that facilitating condition is a determining factor for having the right behaviour intention toward LMS acceptance. Based on the above assertion, empirical evidence suggests that facilitating condition is important in understanding user's behaviour intention to use the LMS. Therefore, it is hypothesised that;

H4: There is a significant and positive relationship between facilitating conditions and learners' intention to use LMS.

3.3.5 Training

The process of learning or transmitting information, skills, and abilities (KSA) required to carry out a particular task or function is referred to as training. As a result, the advantages of training for both organisations and individuals are strategic and thus much more extensive (Milhem et al., 2014). Training is the method of achieving an individual's desired behavioural pattern, and it plays an important role in the use and acceptance of information technology.

Universiti Utara Malaysia

Moshari (2013), found that learners' attitudes toward computers were critical in their continued use of computers as learning tools in a previous study conducted in Malaysia. One of the attributes related to improving their attitude towards using a computer is training (Sam et al., 2005). Given the widespread recognition among researchers and practitioners that training is an important factor in predicting technology adoption and use and the lack of supporting models that connect the two, a new model would provide useful information to decision-makers (Harris, 2016). As suggested by Harris (2016), and due to the importance of training towards technology acceptance, the researcher introduces

training as an independent variable. The researcher wants to learn new things and see if adding a training reaction build to the UTAUT model will enhance it.

Nakano et al., (2015), in their study to investigate the impact of training on the adoption of rice cultivation technologies and productivity in an irrigation scheme in Tanzania indicated that training improved the adoption of technology. In another study by Singh (2017) to evaluate the impact of training on the adoption of the technologies given to farmers in India, it had been proven that training programme had desirable impacts on the farmer's knowledge and improved technology adoption. These findings are supported by the recent study of Farias and Resende (2021), in their effort to evaluate the impact of training on the acceptance of a new system, as well as the relationship between the impact of training and the acceptance of new technology with the frequency of use of the system by the user in a federal institution of higher education in Brazil. The findings of the study indicated that the greater the perception of impact of training, the higher the acceptance of the new system (Farias et al,. 2021). Additionally, their study concluded that it is possible to infer that training indirectly expands the intention to use, by reducing the perceived risk and increasing the perceived ease of use and confidence (Farias et al,. 2021).

Universiti Utara Malaysia

Drawing from this assertion, the researcher argues that training has the ability to enhance user intention towards LMS adoption. Therefore, the following hypothesis is advanced:

H5: There is a significant and positive relationship between training and learners' intention to use LMS.

3.4 Behaviour Intention (BI) to Use LMS.

Technology usage and acceptance among users are deemed to be the main criteria in Information Technology (IT) project implementation and progress. That is because the intention of consumers (BI) to use technology is a critical factor in an information system's (IS) success or failure (Mukred et al., 2020).

3.4.1 Definition of Behavioural Intention

The probability of a person performing or executing a particular behaviour is known as Behaviour Intention (BI) (Ajzen, 1991; Hong et al., 2015). According to Venkatesh et al. (2003), BI has a significant effect on user behaviour. It is a strong predictor of actual behaviour and disposition. (Ajzen, 1991; Liebenberg et al., 2018; Mathieson, 1991). Furthermore, according to Ajzen's (1991) literature review, evidence of a connection between actual usage and behaviour intention has been accumulating since the 1980s. It clarified the impact of intention toward behaviour on dispositional prediction. As a consequence, intention can be used to accurately represent a person's behaviour (Ajzen, 1991). For example, Hong et al., (2015) and Zawawi et al., (2009) emphasised BI as a direct determinant of an individual's behaviour and the relationship between BI and behaviour, which BI contributes to actual conduct.

Behavioural intention involves influencing factors to motivate behaviour indicating the planning purpose and effort to act in that certain behaviour. Behavioural intention to use affects the actual use, and hence prediction of behaviour on behavioural intention can be determined (Ayad, 2018). The strength of one's intention to perform a specific behaviour can be assessed using behavioural intention scale (Sheppard et al., 1988).

Universiti Utara Malaysia

3.4.2 The Importance of Behavioural Intention

Studies have always focused on why and how individuals adopt new technology. Many experiments have discovered that user behaviour intention influences use behaviour positively (Venkatesh et al., 2003). More specifically, Ajzen (1991) states that behavioural intention directly influences usage behaviour, including technology usage behaviour. Intention itself can explain the attitude of an individual towards the actual behaviour. Furthermore, the relationship between intention towards the technology actual use is well proven in information systems literature (Ajzen, 1991; Taylor & Todd, 1995a; Viswanath Venkatesh & Davis, 2000). These variables are used to determine how well people will adapt to new technology. Furthermore, the intention to use the device is thought to be the most important indicator of actual use (Ajzen & Fishbein, 1980; Chau & Hu, 2001; Davis et al., 1989; Venkatesh et al., 2003).

The user's preference to use the services is closely linked to their actual system use, an assumption applicable when behaviour is voluntarily made by the individual (Ajzen & Fishbein, 1980). Hence, it is believed that the user intention towards system usage is linked to their usage behaviour if the use of technology is according to their voluntary decision. Many studies on online service usage have considered intention to predict the use and actual use of technology (Irani et al., 2008)). Several studies have evidenced the intention and usage of technology relationship, and the two variables are invaluable in measuring technology acceptance (Ajzen, 1991; Ching, 2016; Taylor & Todd, 1995b; Venkatesh et al., 2003; Viswanath Venkatesh & Davis, 2000; Williams et al., 2015). In this study, BI indicates the employees of Telekom Malaysia's intention or plan to use the LMS.

Ramírez-correa et al., (2015), in their research to analyse an innovative model to explain behavioural intention to use mobile Internet in the United States by using the operating system of smart phones, self-image of respondents and price value antecedents, confirmed the importance of the behaviour intention. This result is supported by the study of Aliaño et al., (2019), in their research looking at behavioural intention, use behaviour and the acceptance of electronic learning systems by comparing higher education and lifelong learning in Spain. The findings of the study stated that behaviour intention was considered as the proxy of actual use (Aliano et al., 2019).

This research looked at behavioural intention, use behaviour and the acceptance of electronic learning systems by comparing higher education and lifelong learning. The findings of the study stated that behaviour intention was considered as the proxy of actual use.

Universiti Utara Malaysia

3.5 Chapter Summary

This chapter has discussed learning management literature in general, behaviour intention, technology acceptance theories, and the Theoretical framework used in this study. The simplified version of the UTAUT was considered in this study as the framework. Most notably, this chapter discusses previous research on users' behaviour intentions to use information systems in general, and the LMS in particular.

CHAPTER 4

METHODOLOGY

4.1 Introduction

This chapter delves into the analysis methods used in the current study in depth. There are sections on research design, population, sampling, and research instrumentation. The data collection method and data analysis techniques, and the reliability and validity of the survey instruments are detailed.

4.2 Research Design

A research design can be thought of as a road map for doing research systematically rather than haphazardly. Sekaran (2013) raised the question about implementing a research plan, such as the types of investigations to be performed and the places where the research will occur. Other issues are the types of samples used, data collection methods, how variables are measured, and the method of analysis adopted to test the hypotheses. Previous research has suggested three approaches: deductive, inductive, and abductive. A researcher's approach is determined by the study's goals, research design, resource availability, and time constraints.

Since this research aimed to modify a hypothesis through empirical review, the deductive approach was deemed as the most appropriate for identifying factors that affect user acceptance of the Learning Management System (LMS) in Malaysia. The deductive approach scrutinises theory through literature reviews to derive logical conclusions from the theory. In line with this study, deductive is presented as hypotheses subjected to test in an empirical setting. The conclusion is based on the validation or falsification of the generated hypotheses.

Universiti Utara Malaysia

The selection of the research approach is also subjected to whether the research is explanatory or exploratory. The purpose of selecting an approach is to contribute to empirical knowledge or the theory's development (Creswell, 2019). This study employed an explanatory approach. In this study, the researcher tries to explain the relationships among variables. The main goal of this study is to figure out why these situations occur and to predict what will happen next. Explanatory studies, including deductive studies, are characterised by research hypotheses that explain the nature and course of relationships between or among the variables being studied (Greener & Martelli, 2015).

The relationships among influential factors are also investigated in this study. To collect data from the respondents, a survey approach was used with a structured questionnaire. The aim of using a survey method is to evaluate the variables being studied and test multiple hypotheses. Finally, since this is a cross-sectional analysis, the information is gathered at a single point in time. This study's data collection took place over a few months in 2020. Each subject's exposure and outcome are measured at the same time. An overview of a population at a given point is also referred to as cross-sectional analysis. Cross-sectional analysis is also known as a prevalence study (Zikmund et al., 2013).

Universiti Utara Malaysia

4.2.1 Research Model

This thesis used a simplified version of the UTAUT model (Venkatesh et al., 2003). As previously stated, the model indicates that four mechanisms are determinants of behavioural intention and information technology use. Performance Expectancy, Effort Expectancy, Social Influence, and Facilitating Conditions are among the constructs. The UTAUT model was updated in this

study to include training as a new aspect. To the best of the researcher's knowledge, few previous studies in the literature looked at these relationships in the sense of an LMS. The research model is constructed by depicting Learners' intention as the dependent variables to evaluate the beta value and calculate the relationships between variables. The researcher did not include actual usage as the dependent variables because TM's new LMS is in the implementation stage.

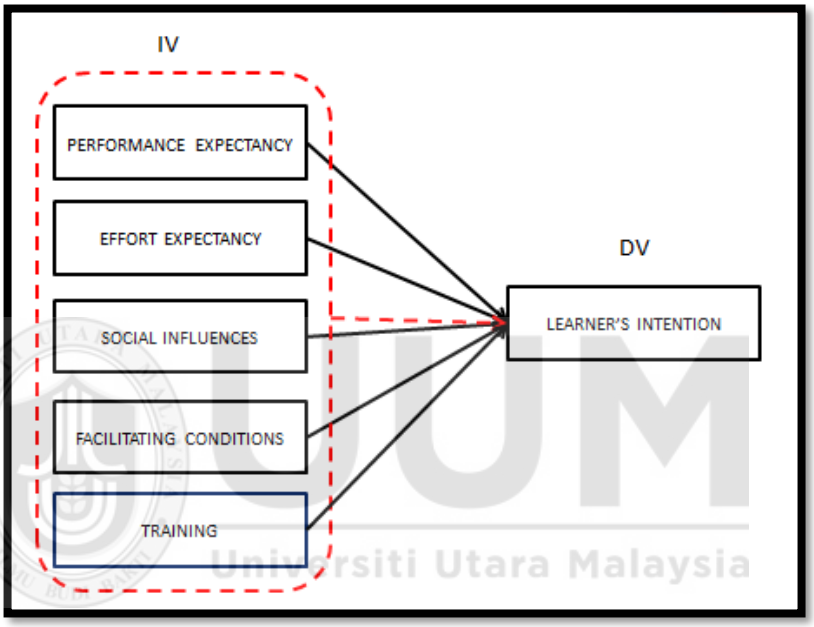

Figure 4.1
Research Framework

4.3 Population and Sampling

The terms "population" and "sample" were described by Ranjit (2019), as "the entire community of individuals, events, or items of interest that the researcher wishes to investigate." Researchers take a random sample of the whole population and draw general conclusions (Mishra & Alok, 2017). In the present research, the population includes the ITNT staff in Telekom Malaysia (TM). The reason to select TM in this study is that it is one of the largest government link companies (GLC) in Malaysia. Hence any improvement or changes in the company's well-being may possibly affect

the wellness of the country. In the company annual report for 2019, TM has an employee base of over twenty-two thousand (22,000) people (Hisham, 2019, p.10), and ten thousand of them belong to the ITNT unit.

As the front liners in TM, the ITNT unit is located in all regions of the country. The ITNT team must have the same level of knowledge regarding TM's business to address customer needs. This situation is why the ITNT unit is LMS's primary target user (Ahmad, 2018). Since TM is underway implementing a new LMS, the researcher sought the opportunity to carry out this study that will help TM ensure better adoption of the system in the organisation. Therefore, the ITNT staff were selected as the population of the current study.

4.3.1 Sampling

According to Hair et al., (2007), collecting data from all population members under investigation is not always feasible; therefore, the researcher uses a sample of the entire population. "A sample is a subset of the population that is relatively small" (Hair et al., 2007a, p.2). Two types of sampling are commonly used in social science research: probability sampling and non-probability sampling. The term "probability sampling" refers to methods of sampling in which the probability of each case selected from a larger population can be calculated and is never zero (Saunders et al., 2019). Non-probability sampling, on the other hand, is the application of sampling methods in which the likelihood of each case being chosen is unknown (Saunders et al., 2019). Probability sampling is much more expensive and complicated than non-probability sampling because the latter can be done with any individuals who are available (Showkat & Parveen, 2017).

Universiti Utara Malaysia

In this study, non-probability sampling was used as the sampling method. Two reasons lead to this choice. As previously mentioned, non-probability sampling is less time and money-consuming than probability sampling. Probability sampling with a vast population is nearly impossible. As the research could not reach a large population in TM, non-probability sampling can overcome this problem. Furthermore, even though probability sampling has more theoretical significance, convenience samples are the industry norm in developmental science (i.e., probability sampling yields samples with clearer generalisability) (Jager et al., 2017).

Bornstein et al., (2013) tallied probability sampling and various nonprobability sampling methods in five major developmental science journals between 2007 and 2011. The findings showed that 92.5 per cent of the studies for which the type of sampling technique could be determined conclusively using convenience sample. Probability sampling was used in just 7.5 per cent of the studies. Additionally, according to a tally of recent publications in reputable developmental science journals, convenience samples were the norm. They were 16 times more likely to be used than random samples (Jager et al., 2017). As a norm in social science, this study is also using the convenient sampling method.

Universiti Utara Malaysia

4.3.2 Sampling bias

Sampling bias means that the samples of a stochastic variable that are collected to determine its distribution are selected incorrectly and do not represent the true distribution because of non-random reasons (Panzeri et al., 2008). Sampling bias occurs when some members of a population are systematically more likely to be

selected in a sample than others. Sampling bias limits the generalisability of findings because it is a threat to external validity, specifically population validity (Andringa & Godfroid, 2020). In other words, findings from biased samples can only be generalised to populations that share characteristics with the sample. The choice of research design or data collection method can lead to sampling bias (Adams et al., 2018). Sampling bias can occur in both probability and non-probability sampling (Shringarpure & Xing, 2014).

In probability sampling, every member of the population has a known chance of being selected. For instance, a random number generator can be used to select a simple random sample from the population. Although this procedure reduces the risk of sampling bias, it may not eliminate it. If the sampling frame or the actual list of individuals that the sample is drawn from does not match the population, it could result in a biased sample (Shringarpure & Xing, 2014).

Universiti Utara Malaysia

A non-probability sample is selected based on non-random criteria. For instance, in a convenience sample, participants are selected based on accessibility and availability. Non-probability sampling often results in biased samples because some members of the population are more likely to be included than others (Adams et al., 2018). Careful research design and sampling procedures can help to avoid sampling bias (Andringa & Godfroid, 2020). In order to avoid sampling bias, the researcher needs to:

- Define a target population and a sampling frame (the list of individuals that the sample will be drawn from).
- Match the sampling frame to the target population as much as possible to reduce the risk of sampling bias.

- Make online surveys as short and accessible as possible.
- Follow up on non-responders

Oversampling is another method that can be used to avoid sampling bias in situations where members of defined groups are underrepresented (under coverage). This is a method of selecting respondents from some groups so that they make up a larger share of a sample (Garson, 2016).

Drawing from this assertion, this study has taken in account all the necessary actions to avoid sampling bias by clearly defining the target population and matching the samples with the target population. Furthermore, the researcher has made the online survey questionnaire short and easily accessible to the respondent. To ensure a good response rate, the researcher performed a follow up with the respondent by sending a follow up email to them. Additionally, the researcher has selected a sampling size of 600 instead of 370 as recommended by the sampling table of Krejcie and Morgan (1970) and Sekaran (2013). According to Morgan (2015), a larger sample will increase the reliability and generalisability of the measurement.

4.3.3 Convenient Sampling

Convenience sampling (also known as availability sampling) is a specific type of non-probability sampling method that relies on data collection from population members who are conveniently available to participate in study (Ranjit, 2019). Convenience sampling is a type of sampling where the first available primary data source will be used for the research without additional requirements (Walliman, 2018). In other words, this sampling method involves

getting participants wherever you can find them and typically wherever is convenient. In convenience sampling, no inclusion criteria are identified prior to the selection of subjects. All subjects are invited to participate.

In its basic form, convenience sampling method can be applied by stopping random people on the street and asking questions from the questionnaire. 'Pepsi Challenge' marketing campaign can be referred to as a relevant example for this sampling method. 'Pepsi Challenge' is occasionally held in large shopping centres and other crowded locations and all members of population are invited to participate in the contest without any discrimination (Mishra & Alok, 2017). In the case of this study, the target respondent is the population members who attended a training session conducted by TM Technical Center of Excellence. They were selected because the researcher has the data for all the training session plan by the centre. Hence, it was convenient for the researcher to identify the members of the population to be invited for the survey.

Universiti Utara Malaysia

To distribute the questionnaire to the target respondent, the researcher appointed six collectors from Technical Academy. These collectors were also trainers. They were requested by the researcher to distribute the questionnaire to their training participant who fit the selection criteria (a member of the ITNT unit). Figure 4.2 illustrates the stages that the researcher went through when conducting sampling.

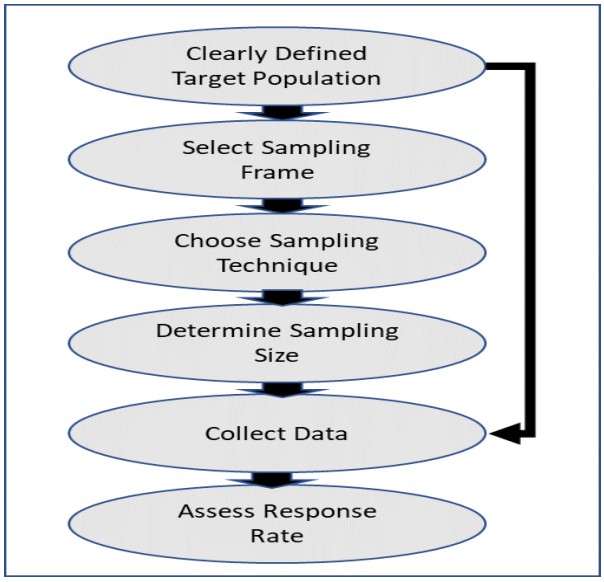

Figure 4.2
Sampling Process Steps
Source: Taherdoost (2018)

Stage 1: Clearly Define Target Population

As the first step in the sampling process, the target population must be clearly defined. Employees of Telekom Malaysia (TM) are the focus of this research. TM was selected because of its crucial role as one of the largest Government Link Companies (GLC) in Malaysia. Since TM is implementing a new LMS system, the researcher is taking the opportunity to support the organisation by providing inputs on the promoters and demotes for the system usage.

Stage 2: Select Sampling Frame

A sampling frame is a list of the specific cases that were used to build the sample. In the sampling frame, the population must be represented (Taherdoost, 2018, p.20). The sampling frame is a list of anyone eligible to be sampled from a given population (Sekaran, 2013). A sample is a unit selected from a larger group of the company. The quality of sample data is crucial as it

will affect the research's generalisations (Hussin, 2014, p.109). Hence, a more extensive sampling size will provide a better probability of the general population. A sample frame is constructed from decisions about the population elements to be selected, and it involves the sample size and the sampling technique (Sekaran, 2013).

In this study, the individuals selected comprised the executive and non-executive of the Information Technology and Network Technology (ITNT) unit in TM. The researcher selected this unit because it is the largest TM unit, with 10,000 members in November 2019 (Hisham, 2019). Overall, ITNT employees represent 45% of the total workforce in TM. The most significant number of workers in this unit signifies the importance of their contribution to the organisation. ITNT could be regarded as the backbone of the organisation. The ITNT team is not only taking care of the network quality services offered by the organisation to the customer, but they are also the front liners confronting the customers' needs and concerns.

Universiti Utara Malaysia

In short, the ITNT team members must be equipped with adequate knowledge to enable them to perform their duty efficiently. As technology change rapidly, they need to be on top of things. Upon understanding the need to keep this team on their toes with the rapid evolution of technology, it is likely that they have to be ready to adopt the LMS as a tool to help them achieve the level of knowledge they need to have. The respondents denote different abilities, experiences, and skills in expertise and intellectual capital and influence business performance (TM Annual Report, 2016). Dr Zainal Abu Zarim, Vice President of TM Learning and Development Division also recommended and supported the researcher in selecting the target population, which was more

feasible and for the notion that the finding associated to the unit (ITNT) can be generalised for TM as a whole.

4.3.4 Unit of Analysis

The study's research unit was formed by the individuals employed in Telekom Malaysia's (TM) Information Technology and Network Technology (ITNT) department. The study views every staff's response as an individual source of data to study the "Learners' Intention" to use the LMS. Accumulatively the data was analysed to form an understanding of the proposed relationship. The selection is justifiable based on a few reasons. Individuals are seen as the most appropriate respondents for this study because they are LMS end-users. Second, based on the theoretical grounds of the Behavioural Intention and User Acceptance of UTAUT Model, the variables under investigation are under the whim and influence of the person concerned (Ayaz & Yanartaş, 2020; Venkatesh et al., 2003, 2011).

Universiti Utara Malaysia

4.3.5 Sampling Size

The number of subjects included in a survey is referred to as the sample size. To put it another way, it's a selection of people chosen from the general population to represent the whole population in a survey. For example, suppose we want to forecast a society's reaction in a specific age group on their response toward a particular product. In that case, we could conduct a preliminary assessment based on a sample that represents the targeted population. Some researchers define sample size as the subset of a population required to ensure significant results (Sekaran, 2013).

For this study, due to inherent difficulties in collecting and examining all related elements in the population, the researcher did not choose the entire ITNT population as a sample. Zikmund (2012 p.69) mentioned that a researcher seldom chooses the whole community as a study sample. Instead, the sampling size will be determined by the population size. To decrease the probability of errors, the researcher must choose the proper sample size (Sekaran, 2013, p.266). There are a few procedures in determining the right sample size, and generally, it depends on the statistical techniques implemented in the study (Al Hakim, 2012, p.133). The sample size of a study refers to the number of participants in it. In a nutshell, Sekaran (2003), "Sampling Size Table" and Krejcie and Morgan's (1970) "Sampling Size Table" were used to decide the sample size for this study. Both of the tables are shown below.

Table 4.1
Sampling Size Base on Number of Population

N (Population)	S (Sample Size)	N (Population)	S (Sample Size)
10000	370	300000	379
15000	375	400000	380
200000	377	500000	381

Source: Sekaran (2003)

Table 4.2
Number of Sampling/Respondent

N	S	N	S	N	S	N	S	N	S
10	10	100	80	280	162	800	260	2800	338
15	14	110	86	290	165	850	265	3000	341
20	19	120	92	300	169	900	269	3500	346
25	24	130	97	320	175	950	274	4000	351
30	28	140	103	340	181	1000	278	4500	354
35	32	150	108	360	186	1100	285	5000	357
40	36	160	113	380	191	1200	291	6000	361
45	40	170	118	400	196	1300	297	7000	364
50	44	180	123	420	201	1400	302	8000	367
55	48	190	127	440	205	1500	306	9000	368
60	52	200	132	460	210	1600	310	10000	370
65	56	210	136	480	214	1700	313	15000	375
70	59	220	140	500	217	1800	317	20000	377
75	63	230	144	550	226	1900	320	30000	379
80	66	240	148	600	234	2000	322	40000	380
85	70	250	152	650	242	2200	327	50000	381
90	73	260	155	700	248	2400	331	75000	382
95	76	270	159	750	254	2600	335	1000000	384

Source: Krejcie and Morgan (1970).

As of November 2019, the target populations in this research had accumulated to 10000 individuals. Based on Uma Sekaran (2003) table and Krejcie and Morgan (1970), a sample of 370 respondents is recommended. However, to avoid shortage in the sampling, the researcher decided to collect 600 samples. Based on the recommendation from Morgan (2015) that a larger sample will improve the power of the tests (i.e., their ability to detect significant results). In addition, it will improve the accuracy of the estimate (Morgan, 2015).

Universiti Utara Malaysia

4.4 Instrument Adaptation and Measurement

Following the determination of a proper sample unit and sample size, instrument selection is another crucial part of the entire research design. Researchers need to select an accurate, complete, and relevant instrument to achieve the research goals (Wang,

2018). Creating a new assessment instrument requires extensive pilot and evaluation studies, along with a sound theoretical explanation of why and how the instrument was developed (Daunert & Seel, 2020). Given the costs, in terms of the time and effort necessary to develop an instrument from scratch, a more effective way to measure behavioural intention in a new context is by adapting an existing behavioural intention measuring tool.

To validate the research model and preserve the material's validity, a survey instrument based on existing literature was adapted for the reasons mentioned above. The scale items for the UTAUT original constructs (performance expectancy, effort expectancy, social influence, facilitating conditions, and behavioural intention) were adapted from Oliveira et al., (2014) and Venkatesh et al., (2003). For the newly introduced variable (i.e., training), the researcher adapts the questionnaire from previous research conducted by Algahtani (2017) in Saudi Arabia.

Universiti Utara Malaysia

Table 4.3
Construct and Measurement Item

PERFORMANCE EXPECTANCY		
SOURCE	ORIGINAL FROM SOURCE	MODIFIED BY THE RESEARCHER
(Venkatesh et al., 2003) (Oliveira et al., 2014)	I think that using Internet Banking would improve my performance	I believe using LMS enhances my work performance.
(Venkatesh et al., 2003) (Oliveira et al., 2014)	I think that using Internet Banking would enable me to conduct tasks more quickly.	I believe using LMS helps to get information more quickly
(Venkatesh et al., 2003) (Oliveira et al., 2014)	I think that using Internet Banking would increase my productivity.	I believe using LMS facilitates my academic efficiency
(Venkatesh et al., 2003) (Oliveira et al., 2014)	Internet Banking is useful to carry out my tasks	I believe using LMS would make it easier to do my work.
(Venkatesh et al., 2003) (Oliveira et al., 2014)	Using Internet banking would multiply my efficiency.	I believe frequent use of LMS would earn me competency in my work
EFFORT EXPECTANCY		
(Venkatesh et al., 2003) (Oliveira et al., 2014)	My interaction with Internet Banking would be clear and understandable	I believe interaction with the LMS interface would be clear and understandable.
(Venkatesh et al., 2003) (Oliveira et al., 2014)	It would be easy for me to become skillful at using Internet Banking.	I believe It will be easy for me to become skillful at using the LMS.
(Venkatesh et al., 2003) (Oliveira et al., 2014)	I would find Internet Banking easy to use.	I believe the LMS is easy to use.
(Venkatesh et al., 2003) (Oliveira et al., 2014)	I think that learning to operate Internet Banking would be easy for me.	I believe the use of LMS is more flexible.

Universiti Utara Malaysia

Table 4.3 Continued

SOCIAL INFLUENCE		
SOURCE	ORIGINAL FROM SOURCE	MODIFIED BY THE RESEARCHER
(Venkatesh et al., 2003) (Oliveira et al., 2014)	People who influence my behaviour think that I should use Internet Banking.	I believe important people in my organisation think I should use the LMS.
(Venkatesh et al., 2003) (Oliveira et al., 2014)	People who are important to me think that I should use Internet Banking.	I believe people who are important in my unit would want me to use LMS.
(Venkatesh et al., 2003) (Oliveira et al., 2014)	People in my environment who use Internet Banking services have more prestige than those who do not.	I believe people that use the LMS in my organisation are more influential.
(Venkatesh et al., 2003) (Oliveira et al., 2014)	People who are important to me (e.g., family, friends) think that I should use Internet banking.	I believe I would use the LMS if my friends use it.
(Venkatesh et al., 2003) (Oliveira et al., 2014)	The bank has supported the use of Internet banking.	I believe my organisation supported the use of LMS.
FACILITATING CONDITION		
(Venkatesh et al., 2003) (Oliveira et al., 2014)	I have the resources necessary to use Internet Banking.	I believe I have the resources to use the LMS in my organisation.
(Venkatesh et al., 2003) (Oliveira et al., 2014)	I have the knowledge necessary to use Internet Banking.	I believe I have the knowledge to use the LMS.
(Venkatesh et al., 2003) (Oliveira et al., 2014)	Instruction provided is making it easier to use Internet Banking.	I believe, given the specific instruction, it would be easier for me to use the LMS.
(Venkatesh et al., 2003) (Oliveira et al., 2014)	There is external/internal support group available for assistance with IT innovation difficulties.	I believe an admin personnel is available to support in case of difficulty in using the LMS in my organisation.
(Venkatesh et al., 2003) (Oliveira et al., 2014)	I have resource necessary to use the IT innovation in my business.	I believe adequate ICT facilities are available at my unit to access the LMS services.

Universiti Utara Malaysia

Table 4.3 Continued

TRAINING		
SOURCE	ORIGINAL FROM SOURCE	MODIFIED BY THE RESEARCHER
Al-Gahtani (2017)	I feel training will help me to use Blackboard.	I believe adequate training will help me to use the LMS services.
Al-Gahtani (2017)	I feel adequate training will make me want to use Blackboard more.	I believe adequate training will encourage me to use the LMS more frequently.
Al-Gahtani (2017)	I feel the university should provide training on the usage of Blackboard.	I believe the organisation should provide training on the usage of the LMS.
Al-Gahtani (2017)	I feel training will make me more comfortable to use Blackboard.	I believe by having a training session will make me more comfortable to use the LMS.
Al-Gahtani (2017)	I feel a training session will help me to use Blackboard to its full potential.	I believe a training session will help me to use the LMS to its full potential.
LEARNERS INTENTION		
(Venkatesh et al., 2003) (Oliveira et al., 2014)	I think everyone should use internet banking.	I believe that everyone in my unit should use the LMS facilities in the future.
(Venkatesh et al., 2003) (Oliveira et al., 2014)	I believe using internet banking should be voluntary.	I perceive using the LMS as voluntary.
(Venkatesh et al., 2003) (Oliveira et al., 2014)	I will continue to use internet in the future.	I intend to continue using the LMS in the future.

Universiti Utara Malaysia

This research is designed to investigate factors influencing users' behavioural intention to use new technology. The new technology refers to the newly implemented LMS in TM, which is not yet open for common use. This situation explains why continuance intention was not included in this study. Hence, all measurement items that were previously validated in earlier studies were slightly modified to fit this study's specific context.

Moreover, a pilot study was developed to test whether all these measures are valid. The pilot study helps to test the measuring instruments' reliability and validity to test the hypotheses of this research.

4.5 Questionnaire Design

4.5.1 Types of Questionnaires

A questionnaire is a series of questions designed to reflect a specific variable based on a respondent's feelings. A questionnaire could be dichotomous, close-ended, or open-ended. In this study, the questionnaires are close-ended. The respondents are restricted in selecting their choice within the set of alternative answers to measure their objective and subjective impression on each variable. The questionnaire is more appropriate in comparison to other methods, like interviews. At the same time, the questionnaire approach is a fast, inexpensive, efficient, and authentic data assessment method (Zikmund et al., 2012).

questionnaire used in this research was adapted from previous studies based on the identified variables (Algahtani, 2017; Oliveira, 2014; Venkatesh et al,. 2003). The questionnaire comprises 27 items, excluding demographic characteristics measurements. English and Bahasa Malaysia were used to create this

questionnaire. The questionnaire was sent to an expert team in the linguistic department of University Technology MARA (UiTM) for translation and equivalence in both languages.

4.5.2 Collections of Questionnaire

Six collectors were assigned to assist the researcher in administering the questionnaire. These collectors were selected among the trainers of TM Technical Centre of Excellence (TCOE). All the collectors were briefed on the content of the survey and how it should be administered. Quick Response codes (QR codes) and the link to the questionnaire (Google Forms) were provided to the collectors. Google Form is used as the platform for the questionnaire as it allows the researcher to create as many questions as needed and set no limit to the number of participants to the survey. Google Form also helps organise the data retrieved from the study and glance at the data through a neat dashboard presentation. The most crucial explanation of why Google Form is chosen as the survey medium is that the analytical process's data can be easily transferred to the statistical kit.

Since the collectors are also trainers, the researcher advised them to administer the questionnaire to their training participants from the ITNT unit. As a staff member of TCOE, the researcher was provided with the training schedule for the whole year. By having the schedule, the researcher was able to identify the training sessions involving the target participants. From there, six hundred target participants were identified from the various training sessions. To reach the target participants based on the schedule, the researcher estimated six months.

Universiti Utara Malaysia

After every targeted training session, the researcher will send a reminder email to the target participant to complete the survey questioned.

4.5.3 Rating Scale

The responses in this study are assessed using a Likert scale, which has been thoroughly validated in the social sciences (Garland, 1991, p.2; Shih & Fang, 2004, p.217). The responses are rated on a five-point Likert scale as it is the most used scale in research (Gwinner, 2006). With the 5-point scale, the respondents could choose a neutral rating if they were neutral on some topics. It can be defined as a valid opinion among respondents, according to Gwinner (2006, p.2). All of the items were assessed using a five-point Likert scale to ensure consistency among variables and to avoid respondents' uncertainty (Ackfeldt & Coote, 2005). Items for all constructs are listed in Appendix A.

4.5.4 Validity and Reliability of the Research Instruments

The survey's instruments design cannot be divorced from a set of inadequacy in the format, wording, content of the questions, and how the questionnaire was formulated and distributed. Adcock and Collier (2001) describe validity as "the degree to which construct measured is unbiased and ensures consistent measurement across time and various items in the instrument." Consequently, validity can be described as the degree to which an instrument accurately measures what it claims to measure. Fink (2013) outlined some instrument validity requirements in the following section.

1) Content validity implies the extent of accuracy the questions represent the structures it examines; and

2) Construct validity indicating certainty that the instrument measures what it is intended to measure.

4.5.5 Content Validity and Face Validity

The questionnaire was given to four experts in the field of research to assess the content validity of the questions and ensure completeness and consistency of the measures as suggested by Creswell (2009). Firstly, the questionnaire was presented to a visiting senior lecturer at the Othman Yeop Abdullah Graduate School of Business, University Utara Malaysia, who is an expert in statistics, for her comments. Secondly, the questionnaire was put forward to a professor from the School of Business Management, University Utara Malaysia. The questionnaire was then presented to a professor at President University, Indonesia. Lastly, it was presented to an industries expert who is the Vice President (VP) of the Talent and Leadership Management in Telekom Malaysia. Each of the four experts thoroughly reviewed the questionnaire to ensure adequacy, comprehensibility, and reliability of the measurement used. The reviewers also examined the extent to which each item portrays the proposed constructs and whether the itemised statement and the scale chosen were appropriate. The academics' suggestions have allowed the researcher to make some changes in the survey questions' arrangement to improve the questionnaire's general flow and sequencing.

Among the amendments that the experts had suggested were to broaden the education segment; instead of having only two categories, it was recommended to be split into four groups. Originally the education segment only consisted of (a) certificate or diploma and (b) first degree or postgraduate. With the recent

suggestion, the education categories become (a) certificate or diploma, (b) first degree, (c) master's degree and (d) doctorate or PhD. Additionally, they also recommended "years of service" to be added to the demography question as they believed it would bring valuable information. They also suggested that the job category (technical or non-technical) to be removed from the questionnaire as it is not relevant to the current study. All of the experts stated that they agreed with the rest of the questionnaire set. The questionnaire was then used for the subsequent pilot study.

Table 4.4
List of experts and recommendations

Expert	**Position**	**Recommendation**
Dr. Seyedeh Khadijeh Taghizadeh	Visiting Senior Lecturer at OYAGSB UUM	broaden the education segment from 2 to 4 segment
Prof. Dr. Thi Lip Sam	Senior Lecturer at OYAGSB UUM	To add years of service in the demography question.
Prof. Dr. Ajay Chauhan	Dean, President University, Indonesia	To removed job category (technical & non-technical)
Dr. Zainal Abu Zarim	Vice President TM L&D	Agreed with the questionnaire suitability for TM employees.

4.5.6 Pilot Study and Construct Validity

The respondents in the ITNT unit in TM were surveyed as part of a pilot project. The goal of the pilot study is to ensure that the questions and instructions are clear; to validate data; to understand the variables that influence LMS usage intention in TM; to determine whether the questions yield relevant information, and to determine how long it takes respondents to complete the questionnaire. The pilot study also analyses the statements in the questionnaire in terms of their content and language. A pilot study is generally employed on 25-100 subjects

(Cooper & Schindler, 2012, p.199). Based on this, 40 questionnaires were distributed using convenience sampling. From the forty selected participants identified for the pilot test, only twenty-six participants responded to the survey, producing a sixty-five percent response rate.

Based on the result of pilot data, the reliability for each of the measurement instruments was calculated. A significant standard for adopting prior instruments is their unique internal consistency based on Cronbach alpha reliability coefficients (Pallant, 2011). Cronbach's alpha is an index of reliability for quantitative data, and it points out how well the items in a set are positively correlated to one another. Internal accuracy is more consistent if the Cronbach's alpha value is equal to one. Detail list of Cronbach alpha reliability obtained from the pilot study is shown in Table 3.3.

Table 4.5
Reliability Coefficient Values for Items of Constructs in Pilot Study

Constructs	No. Of Original Items	Cronbach's Alpha
Performance Expectancy	5	0.964
Effort Expectancy	4	0.940
Social Influence	5	0.941
Facilitating Condition	5	0.934
Training	5	0.944
Learners Intention	3	0.954

4.5.7 Ethical Considerations

Before conducting this research, approval from the TM Learning and Development unit (L&D) was ensured. A sample questionnaire was sent to TM L&D review to understand what the objectives of the research. After reviewing the questionnaire, TM L&D provided their consent for the researcher to proceed with the survey without any changes to the questionnaire set. Before the

questionnaire was distributed to the targeted respondent, the collectors firstly explained the ethical consideration involved in the study. Prior approval was obtained from the participants to ensure all ethical issues were understood and their privacy was fully valued in the study.

Each respondent was told of their rights on autonomous decision to withdraw whenever they desired from the survey. Participants were also assured that personal information would be kept highly confidential. Aside from that, the respondents were given the researcher's email address and mobile phone number in order to discuss any problems they had while filling out the survey. As for the research results, the respondents were informed that the data analysis would become part of the researcher's academic work. Finally, to ensure confidentiality, each respondent was assured that their identities would be excluded in the outcome, presentation, and publications.

Universiti Utara Malaysia

4.6 Analytical Procedure

Planning, designing, gathering data, analysing, drawing concrete interpretations, and documenting the research results are all part of data analysis in a study. The statistical analysis brings value to meaningless statistics, giving life to data that was once lifeless. Only when proper statistical methods are used are the findings and inferences accurate (Ali & Bhaskar, 2016). The majority of social researchers conduct data analysis through three main phases: cleaning and organising data, describing data, and testing hypotheses. Preparation of data entails data checks that cover precision, data entry of responses, data transformation, and recording a database organisation. For the interpretation of the data in this study, two analytical tools were used, (1) SPSS and (2) SEM-PLS. Details of the test and result will be discussed in the next chapter.

4.7 Chapter Summary

The research design used to address the research questions and achieve the goals was addressed in this chapter. A quantitative study design was chosen to explain the phenomenon. The operationalisation of the variables in the analysis was discussed. The study's population, research unit, and sampling technique were also discussed in the chapter. SPSS V26 and PLS-SEM 3.5.2 were used for the study. The questionnaire's specification and data collection procedure were also discussed.

Universiti Utara Malaysia

CHAPTER 5

DATA ANALYSIS AND FINDINGS

5.1 Chapter Overview

This chapter presents the result of data analyses. The chapter begins with the survey response rate. It is then followed by the profile of respondents based on demographic characteristics (i.e., gender, region, age, working experience and education). Then, data screening and cleaning were conducted to screen the data entry errors, missing value(s), outliers, normality test and multicollinearity test. After that, the descriptive analysis of the variables was discussed. This study employed a two-stage approach, i.e., measurement model and structural model. Measurement model was first carried out to test the convergent validity and discriminant validity. Subsequently, structural model was examined with a five-step assessment. In the end, the hypotheses which include direct relationships was reported.

Universiti Utara Malaysia

5.2 Analysis of Survey Response

5.2.1 Response Rate

For data collection purposes, 600 sets of questionnaires were distributed to employees at Telekom Malaysia. Out of these 600 questionnaires, 406 sets were returned. Eighty-one of them were excluded as they were incomplete. Therefore, only 325 completed and usable questionnaires were obtained, yielding a response rate of 54 percent (see Table 5.1). Therefore, the sample size 325 will be further analysed using Smart PLS-SEM. Table 5.1 illustrates the response rate and usable questionnaires for this study.

Table 5.1
Summary of the Total Questionnaires and the Response Rate

The sample size of the study	**600**
Returned questionnaires	406
Returned and usable questionnaires	325
Returned and unusable questionnaires	81
Non-returned questionnaires	194
Response rate	67.7%
Usable response rate	54.2%

5.3 Data Coding and Data Entry

According to Hair et al., (2014), the questionnaire instruments were grouped and assigned values. Items in the questionnaire were coded by using identifiable codes comprising alpha numerals. Learners Intention was coded as LI. For example, the first question for learners' intention was coded as LI1, the following question was coded as LI2 and this sequence was followed. Performance Expectancy was coded as PE; while Effort Expectancy was coded as EE. Likewise, Social Influence, Facilitating Conditions and Training were coded as SI. FC and TR, respectively. After completion of data coding, all the responses were ready and were entered accordingly into SPSS Statistics version 26.

5.4 Data Screening and Cleaning Analysis

After data were entered into SPSS Statistics 26, the researcher next carried out data screening and cleaning. In detecting the data entry errors, data screening analysis was organised. The data screening also encompassed of analysing the missing values,

detecting outliers and multicollinearity. If any missing value, outlier and multicollinearity were identified, some cleaning techniques were performed.

5.4.1 Data Entry Errors

It is sometimes common to make errors while entering data into SPSS. The data entry error analysis can be conducted in the descriptive or frequency command (Mohd Rafi Yaacob, 2013). After performing this analysis, all entries were correctly entered within the specified range answers. For example, all demographic profiles' responses were within the specified range such as gender are between 1 or 2, region was in the range of 1 to 6, age group ranged from 1 to 4 and working experience was in the range of 1 to 5. Other profiles such as education were also within the specified range. The details of data entry for demographic profiles can be referred in Table 5.2. Similarly, answers for all measurement items in Section B were within the Likert scale of 1 to 5. Table 5.3 indicates the items in Section B were between 1 to 5.

Universiti Utara Malaysia

Table 5.2
Data Entry for Demographic Profiles

	N			
Variables	Valid	Missing	Minimum	Maximum
Gender	325	0	1.00	2.00
Region	325	0	1.00	6.00
Age Group	325	0	1.00	4.00
Working Experience	325	0	1.00	5.00
Education	325	0	1.00	4.00

Table 5.3
Data Entry for Section B (selected items)

	N			
Selected Items	Valid	Missing	Minimum	Maximum
PE1	325	0	1.00	5.00
PE2	325	0	1.00	5.00
EE1	325	0	1.00	5.00
EE2	325	0	1.00	5.00
SI1	325	0	1.00	5.00
SI2	325	0	1.00	5.00
FC1	325	0	1.00	5.00
FC2	325	0	1.00	5.00
TR1	325	0	1.00	5.00
TR2	325	0	1.00	5.00
LI1	325	0	1.00	5.00
LI2	325	0	1.00	5.00

Universiti Utara Malaysia

5.4.2 Treatment of Missing Data

Next, the analysis of missing data was performed. The analysis and treatment of missing data are important because of its consequence on generalisability of the results (Hair et al., 2014). It is also noted that the missing data can create issue due to its negative implication on the data analysis and result (Cavana, Delahaye, & Sekaran, 2003). Due to this implication, analysis on missing data was conducted. The missing data analysis was performed under analysis and missing value analysis command. The result has revealed that there is no missing and out

of range value in this study. The summary of case processing is where the minimum, maximum, valid and missing value of each item in this study are indicated in Appendix D.

5.4.3 Test of Multicollinearity

After completing the screening process, the data was tested with an analysis of multicollinearity. Multicollinearity may exist among variables tested in the study. Multicollinearity test is highly recommended before initiating the proposed model testing (Hair et al., 2010). Multicollinearity analysis was performed to eliminate the problem by assessing the correlations among variables. One simplest way to detect multicollinearity is to analyse the correlation matrix and the existence of correlation value at 0.90 or higher is an indicator of multicollinearity (Hair et al., 2010). It is also argued that the present of multicollinearity can be detected if the correlation of two or more variables are 0.90 or above (Tabachnick & Fidell, 1996). From the Table 5.4, it is clear that all the correlation values are below 0.90; therefore, there is no high correlation among the variables in this study. Hence, it can be concluded that the multicollinearity issue did not appear in the study. Table 5.4 illustrates the correlation values of the variables.

Universiti Utara Malaysia

Table 5.4
Correlations of the Variables

Constructs	Learners Intention	Performance Expectancy	Effort Expectancy	Social Influence	Facilitating Conditions	Training
Learners Intention	1					
Performance Expectancy	0.73	1				
Effort Expectancy	0.80	0.87	1			
Social Influence	0.84	0.80	0.89	1		
Facilitating Conditions	0.82	0.76	0.85	0.89	1	
Training	0.83	0.79	0.80	0.79	0.80	1

Universiti Utara Malaysia

5.5 Demographic Profile of Respondents

This section shows the profile of respondents who participated in this study. The purpose of collecting demographic profile of each respondent is to provide an insight into the subjects and assist in interpreting the results of analysis. Table 5.5 presents the details of demographic profile of respondents.

Out of the total of 406 responses, 83.7% were male, and 16.3% were female. Respondents were also asked to answer the questions about which region they are currently working in. Table 5.5 indicates that most of the respondents worked in Central Region representing 37.2%. About 30.8% of respondents were working in Northern Region, 12.9% were working in Eastern Region, 8.9% work in Sarawak

Region, 5.2% of respondents worked in Sabah Region and about only 4.9% were working in Southern Region.

In terms of age, majority of the respondents are between 31 and 40 years old representing 47.5%. This indicates that the ITNT unit is comprised mainly of people below the age of 40. This age is in line with the job description of ITNT, which requires the team members to perform challenging engineering work such as laying fibre cables and working at height. This age range also portrays that most employees from ITNT are familiar with the use of technology, considering they were born in the computer age.

As for working experience, majority of the respondents in this study had 5-10 years of working experience. This showed that TM had recruited many new members in the organisation in the past ten years. These new employees are the new generation of the TM workforce that will carry out current technology evolution. In addition, almost half of the respondents had a Diploma or lower /Certificate representing 66.2%, and this category of respondents represents the highest number of respondents among other categories; followed by Bachelor Degree representing 28.6%, Master's Degree comprised 4.6%, and about only 0.6% of the respondents had a Doctorate Degree.

Table 5.5
Demographic Profile of Respondents (n=325)

Variable	Category	Frequency	Percentage
Gender	Male	278	85.5
	Female	47	14.5
	Total	325	100
Region	Central Region	121	37.2
	Northern Region	100	30.8
	Eastern Region	42	12.9
	Southern Region	16	4.9
	Sabah Region	17	5.2
	Sarawak Region	29	8.9
	Total	325	100
Age Group	20-30 years	25	7.7
	31-40 years	157	48.3
	41-50 years	70	21.5
	51-60 years	73	22.5
	Total	325	100
Working Experience	Below 5 years	11	3.4
	5-10 years	116	35.7
	11-20 years	67	20.6
	21-30 years	70	21.5
	More than 30 years	61	18.8
	Total	325	100
Education	Certificate/Diploma or lower	215	66.2

Universiti Utara Malaysia

Table 5.5 continued

Bachelor's Degree	**93**	**28.6**
Master's Degree	15	4.6
Doctorate Degree	2	0.6
Total	325	100

5.6 Descriptive Statistics Analysis

Descriptive analysis provides researchers a detailed idea about the respondents' responses for each construct in the study. The descriptive statistical analysis was conducted to describe and summarise the characteristics of each construct, namely learner's intention, performance expectancy, effort expectancy, social influence, facilitating conditions and training, through mean and standard deviation. In addition to that, the comparison between demographic variables (i.e., gender, region, age, working experience and education) and learner's intention were also analysed.

Table 5.6 demonstrates the findings of descriptive statistics (i.e., minimum, maximum, mean and standard deviation) of the constructs in this study. It can be seen that the minimum and maximum value represents the Likert scale used in this study. The minimum value of all the constructs is 1.00 and maximum value is 5.00. To simplify the interpretation, the range of five-point Likert-scale were categorised into equal-sized categories of low, moderate and high. Therefore, the scores of less than 2.33 [4/3 + lowest value (1)] are considered as low; scores of 3.67 [highest value (5) – 4/3] are considered high and those in between considered moderate. All the variables have then mean score range from 4.09 to 4.23; and the standard deviation ranges from 0.54 to 0.57. This means that learner's intention, performance expectancy, effort expectancy,

social influence, facilitating conditions and training were highly perceived by respondents. Therefore, it can be concluded that the level of learner's intention tends to be high.

Table 5.6
Descriptive Statistics of the Constructs

Construct	Minimum	Maximum	Mean	Std. Deviation
Learners Intention	3.00	5.00	4.14	0.56
Performance Expectancy	3.00	5.00	4.23	0.57
Effort Expectancy	3.00	5.00	4.16	0.55
Social Influence	3.00	5.00	4.10	0.54
Facilitating Conditions	3.00	5.00	4.09	0.54
Training	3.00	5.00	4.23	0.56

In addition to that, it was further analysed whether the level of learner's intention differs based on their demographic profiles. Firstly, analysis on gender differences towards learner's intention to switch was used to foresee any differences between male and female on learner's intention of learning management system (LMS). In this case, the t-test was conducted to examine differences between two groups (male and female). According to Sekaran and Bougie (2009, p.346) "… the (independent samples) t-test indicates whether or not there is a significant mean difference in a dependent variable between two groups…". Apart from that, Table 5.7 also denotes that gender did not have significant difference in terms of their learner's intention of learning management system (LMS) since the p-value is higher than 0.05.

Universiti Utara Malaysia

Table 5.7
Independent Samples T-Test between Gender and Learner's Intention

Gender	N	Mean	F-value	p-value*
Male	278	4.15	1.34	0.28
Female	47	4.11		

Subsequently, the ANOVA test was conducted to examine the differences in the level of learner's intention of learning management system (LMS) in terms of region currently working, age, working experience and education. Region was grouped into six categories namely Central Region, Northern Region, Eastern Region, Southern Region, Sabah Region, Sarawak Region. The scores on age were grouped into four categories, which were 20-30 years, 31-40 years, 41-50 years and 51-60 years. Working experience was grouped into five categories which were below 5 years, 5-10 years, 11-20 years, 21-30 years and more than 30 years. In addition, the scores on education were grouped into four categories, which were Certificate/Diploma or lower, Bachelor's degree and Master's Degree and Doctorate Degree. It was noted that all these categories represent more than two indicators, thus the ANOVA test was deployed. ANOVA is defined as "… the statistical models that we use to analyse situations in which we want to compare more than two conditions: analysis of variance (or ANOVA …)" (Field, 2013, p. 430).

The findings on these differences can be referred to Table 5.8. Looking at the regions that the employees were currently working in, the analysis concluded that there was no difference among them in terms of learner's intention of learning management system (LMS) due to the p-value that was greater than 0.05. Also, similar results were concluded with the region, working experience and education. The p-value obtained for region, working experience and education were all above 0.05 indicating no

significant differences in intention to switch based on region, working experience and education. However, with regards to age group, there was a significant difference among the age group where the p-value was at 0.04 (p-value<0.05). This indicates that the age of employee revealed a different level of learner's intention.

Table 5.8
One-Way ANOVA between other Demographic Factors and Learner's Intention

Demography	Category	N	Mean	F	p-value*
Region	Central Region	121	4.09	1.21	0.31
	Northern Region	100	4.16		
	Eastern Region	42	4.20		
	Southern Region	16	3.96		
	Sabah Region	17	4.28		
	Sarawak Region	29	4.28		
	Total	325	4.14		
Age	20-30 years	25	4.21	2.54	0.04
	31-40 years	157	4.13		
	41-50 years	70	4.06		
	51-60 years	73	4.24		
	Total	325	4.14		
Working Experience	Below 5 years	11	4.21	1.40	0.24
	5-10 years	116	4.22		
	11-20 years	67	3.97		
	21-30 years	70	4.12		
	More than 30 years	61	4.22		

Universiti Utara Malaysia

Table 5.8 continued

	Total	**325**	**4.14**		
Education	Certificate/Diploma or lower	215	4.12	0.88	0.45
	Bachelor's Degree	93	4.16		
	Master's Degree	15	4.36		
	Doctorate Degree	2	4.00		
	Total	325	4.14		

In summary, the level of learner's intention of learning management system (LMS) was considered high level. Gender did not reveal any significant difference towards the level of learner's intention. It was also similar to the findings on other categories such as region, working experience and education which indicated no differences towards the level of learner's intention. In contrast, there was a significant difference among the employee under the age group category.

Universiti Utara Malaysia

5.7 The Rationale Behind Choosing PLS-SEM

The purpose of this study is to examine the relationships among latent variables. Hence, SEM is the appropriate method for multiple relationships of dependent and independent variables (Hair et al., 2010). There are two techniques for latent analysis, namely covariance-based SEM (CBSEM) and variance-based SEM (VBSEM). However, to choose the most appropriate technique, normality test is needed as CBSEM is appropriate for normally distributed data while VB SEM is able to serve non-normally distributed data.

5.7.1 Assumption of Normality

Normality is used to describe a symmetrical, bell-shaped curve that has the highest frequency of scores towards extremes in the small and middle frequencies (Pallant, 2011). The assessment of the normal distribution of scores for independent and dependent variables can be obtained by accessing skewness and kurtosis values as suggested by (Pallant, 2011). The scale and measures can be either skewed positively or negatively, especially in social sciences (Pallant, 2011). Kurtosis is also a score to measure the distribution that represents the degree to which the observations gather around the central mean.

Kline (1998) suggests a cut-off point for skewness value to be within the range of -3 and +3. Meanwhile, Coakes and Steed (2003) set up the range for kurtosis value between -3 and +3. Based on the results, the skewness and kurtosis value for this study fell within the acceptable range. This show that the assumption of normality for all the variables is achieved and the data is normally distributed. Table 5.9 highlights the value of skewness and kurtosis for all variables.

Table 5.9
Results of the Skewness and Kurtosis for Normality Test

Factor	Skewness		Kurtosis	
	Statistic	Std. Error	Statistic	Std. Error
Learners Intention	-.168	.135	-.423	.270
Performance Expectancy	-.054	.135	-.216	.270
Effort Expectancy	.057	.135	-.222	.270
Social Influence	.070	.135	-.139	.270
Facilitating Conditions	-.246	.135	-.364	.270
Training	-.018	.135	-.407	.270

In this study, PLS-SEM approach was used to analyse the data for four reasons. First, it has been proven by most researchers to examine a set of relationships between one or more dependents from a set of one or more independents (Garson, 2016). Second, it is a multivariate technique that permits the simultaneous estimation of multiple equations. Third, it can perform factor analysis and regression analysis in only one step (Hair et al., 2010). Finally, PLS can relate a set of independent variables to multiple dependent (response) variables on the response side. While on the predictor side, PLS can handle many independent variables, even when predictors display multicollinearity.

5.8 Model Specification

The original study model included 27 reflective measurement indicators (MVs or items) for six variables (LVs or constructs), including performance expectancy, effort expectancy, social influence, facilitating conditions and training as independent variables and learners' intention as dependent variable. Figure 5.1 shows the original research model in PLS

Universiti Utara Malaysia

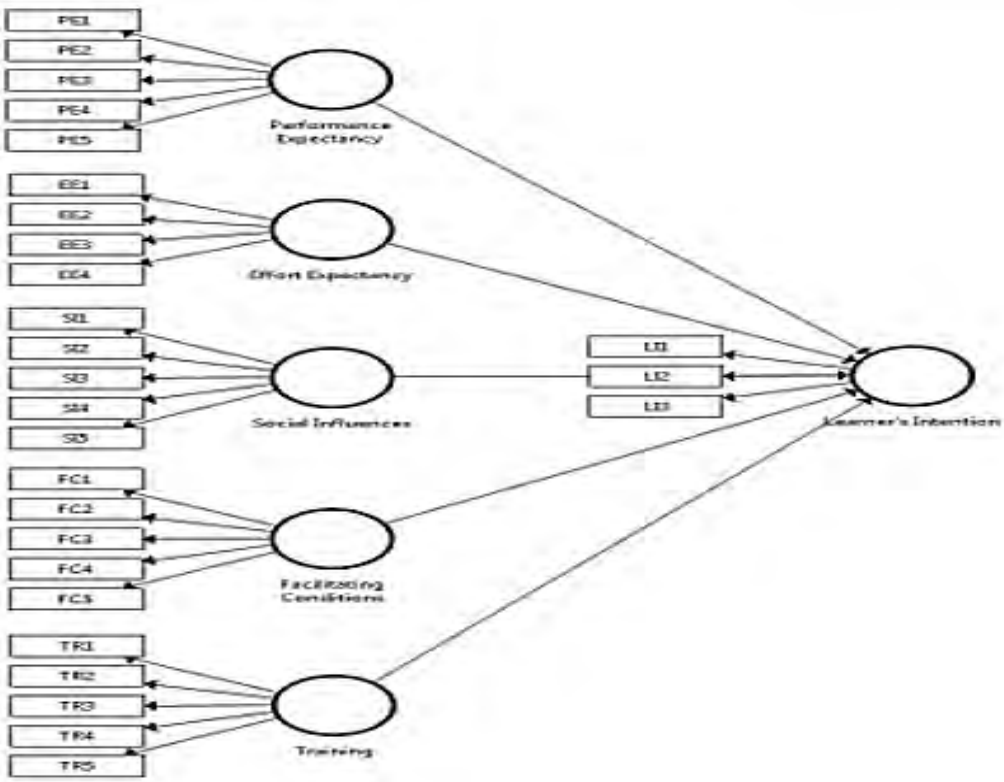

Figure 5.1
Research Model

Universiti Utara Malaysia

5.9 Evaluation of Measurement Model (Outer Model)

As mentioned earlier, this study used the SmartPLS version 3.3.2 to analyse the inferential statistics (Hair et al., 2017). This study follows a two-step approach: measurement model (outer model) and structural model (inner model). The first stage was to evaluate the measurement model or called as the outer model. In the measurement model, the analyses on construct validity and reliability were conducted to check and confirm the reliability and validity aspects of the study constructs. Validity is an analysis that is associated with the term accuracy. A construct measures what it is supposed to measure (Hair et al., 2007, p.426). In contrast, reliability is an assessment to foresee whether the questionnaire reflects the variable that it is measuring (Sekaran, 2013). In the next stage, the structural model was evaluated to test the hypothesised relationship.

The measurement model specifies the relationship between the constructs. According to Hair et al., (2014), two types of validity (i.e., convergent validity and discriminant validity) were evaluated under measurement model. In the convergent validity, three types of analysis were explored, which include cross or factors loading, average variance extracted (AVE) and composite reliability (CR). Convergent validity and discriminant validity will be discussed in detail in sub-sections below.

5.9.1 Convergent Validity

Convergent validity is the degree to which the measure correlates positively with other measures of the same construct (Hair *et al*., 2014). Convergent validity and reliability are assessed as the first step in the measurement model. To assess convergent validity, factor loadings and AVE are assessed; while to examine the reliability of the construct, composite reliability is considered. Indicator reliability refers to the outer loadings of items. According to Hair et al. (2014), loadings below 0.4 should be eliminated while above 0.7 are acceptable. Loadings in between 0.4 and 0.7 should be considered for removal from the scale if the deletion leads to an increase of composite reliability and AVE. Thus, the cut-off point for the cross loading was 0.70. Based on Table 4.10, the loadings for each item were above 0.70. Therefore, it can be concluded that all cross loadings have met one of the requirements for convergent validity. Table 5.10 illustrates the item loading.

Universiti Utara Malaysia

Table 5.10
Item Loadings

Constructs	Items	Loadings
Learner's Intention (LI)	LI1	0.92
	LI2	0.87
	LI3	0.94
Performance Expectancy (PE)	PE1	0.91
	PE2	0.90
	PE3	0.92
	PE4	0.93
	PE5	0.92
Effort Expectancy (EE)	EE1	0.89
	EE2	0.94
	EE3	0.93
	EE4	0.90
Social Influence (SI)	SI1	0.90
	SI2	0.92
	SI3	0.88
	SI4	0.87
	SI5	0.89
Facilitating Conditions (FC)	FC1	0.88
	FC2	0.87
	FC3	0.90
	FC4	0.87
	FC5	0.85
Training (TR)	TR1	0.90
	TR2	0.91
	TR3	0.92
	TR4	0.91
	TR5	0.92

Universiti Utara Malaysia

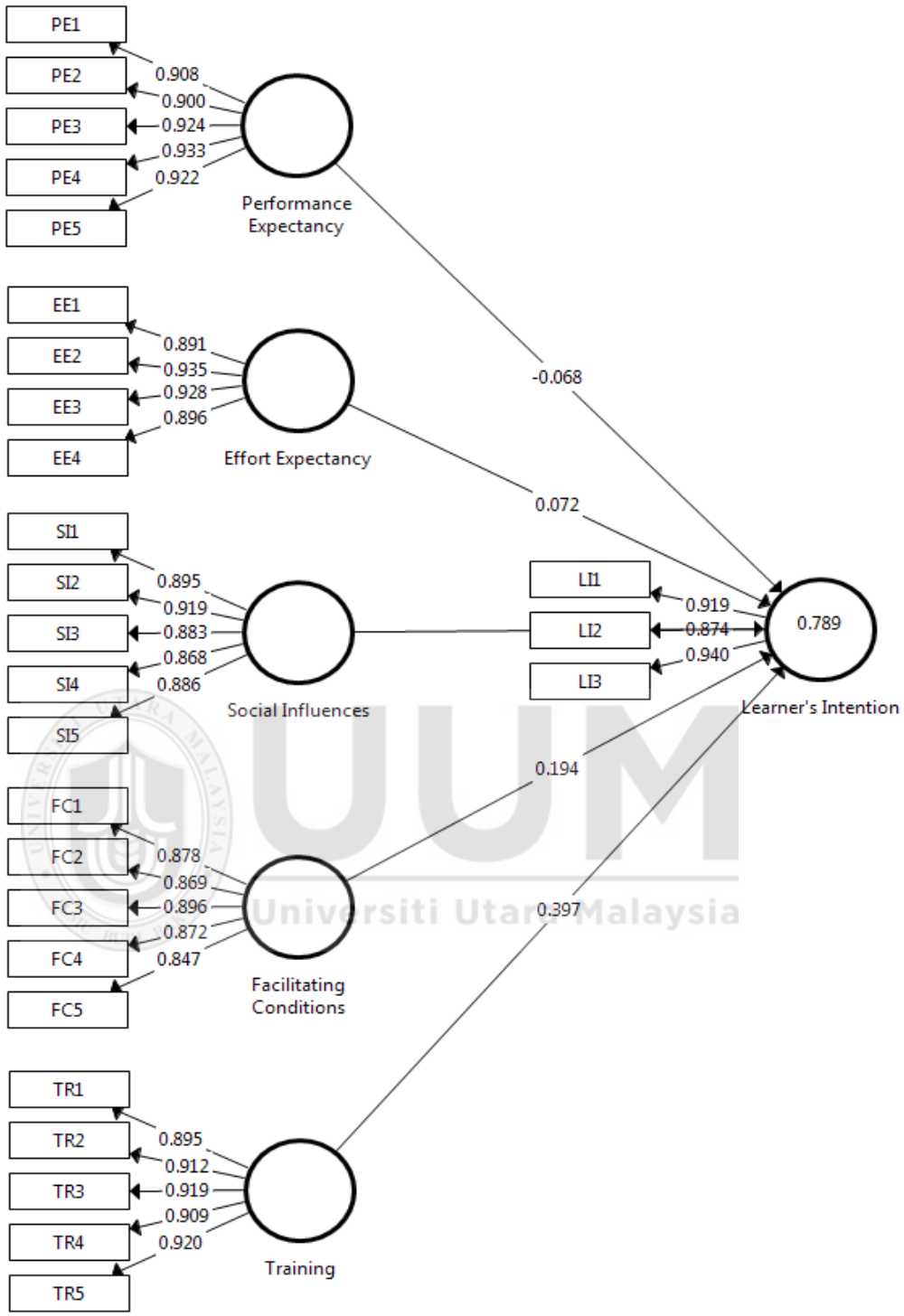

Figure 5.2
Item Loading

Universiti Utara Malaysia

In addition to that, the next step was to look at second indicator of convergent validity, which is the average variance extracted (AVE). AVE is measured to confirm the convergent validity of the outer model. AVE is defined as the average variance extracted among a particular construct's items in relation to the variance shared with the errors of measurement. In other words, AVE values show how much the construct explains the variance of its indicators or items. The recommended AVE value should be above 0.5, indicating that the constructs explain more than half of the variance of its indicators (Hair et al., 2014). Deliberating on the AVE values, performance expectancy is at 0.84, effort expectancy at 0.83, social influence at 0.79, facilitating conditions at 0.76, training is at 0.83 and finally learner's intention at 0.83 (see Table 5.11). Thus, the second indicator of convergent validity which is the AVE requirement for the study was met.

The last aspect to establish convergent validity is composite reliability (CR). The range for CR is from 0 to 1. CR refers to the degree to which a set of items consistently indicate the latent construct (Hair et al., 2014). According to Hair et al (2014), it is generally acceptable to accept value between 0.60 and 0.70 and values between 0.70 and 0.90 are categorised as satisfactory. It has also been noted that higher values composite value indicates higher levels of reliability. Therefore, in the study, it was acceptable to have a composite reliability value from 0.70 and onwards. For this study, the composite reliability value ranged between 0.94 to 0.96 which exceeds the recommended value of 0.70. Hence, it was concluded that all constructs show adequate and high internal consistency.

In a nutshell, the convergent validity is confirmed since all three conditions in convergent validity were met. These three conditions of all loadings are above

0.70 which ranged from 0.85 to 0.94, AVEs are above 0.50 from 0.76 to 0.84, and CRs are above 0.70, stretching from 0.94 to 0.96. The details of convergent validity analysis on loadings, AVE and Composite Reliability as well as the Cronbach Alpha can be referred in Table 5.11.

Table 5.11
Convergent Validity Analysis

Constructs	Items	Loadings	AVE	Composite Reliability	Cronbach Alpha
Learner's Intention (LI)	LI1	0.919	0.83	0.94	0.90
	LI2	0.874			
	LI3	0.940			
Performance Expectancy (PE)	PE1	0.908	0.84	0.96	0.95
	PE2	0.900			
	PE3	0.924			
	PE4	0.933			
	PE5	0.922			
Effort Expectancy (EE)	EE1	0.891	0.83	0.95	0.93
	EE2	0.935			
	EE3	0.928			
	EE4	0.896			
Social Influence (SI)	SI1	0.895	0.79	0.95	0.93
	SI2	0.919			
	SI3	0.883			
	SI4	0.868			
	SI5	0.886			
Facilitating Conditions (FC)	FC1	0.878	0.76	0.94	0.92
	FC2	0.869			
	FC3	0.896			
	FC4	0.872			
	FC5	0.847			

Universiti Utara Malaysia

Table 5.11 continued

Training (TR)	TR1	0.895	0.83	0.96	0.95
	TR2	0.912			
	TR3	0.919			
	TR4	0.909			
	TR5	0.920			

5.9.2 Discriminant Validity

After assessing the measurement model, discriminant validity was assessed. Discriminant validity is the degree to which a construct is truly different from other constructs. Therefore, establishing discriminant validity is mandatory to ensure the uniqueness of each construct and to avoid overlapping constructs where the phenomena is not represented by other constructs in the model (Hair et al., 2014). In addition, items of each construct should load more on its own construct in the model, and the average variance shared between each construct and its measures should be greater than the variance shared between the construct and other constructs (Compeau, D. et al., 1999; Fornell & Larcker, 1981).

Two measures of discriminant validity were proposed by Hair et al. (2014). First, is examining discriminant validity through cross-loadings of the indicators. To examine discriminant validity by cross-loading factors, the loading for all the items designed to measure a particular construct should be higher on their respective construct than other constructs. Looking at the loading for all items in Table 5.12, all the items' loadings in a respective construct are higher than the other constructs. Therefore, it was concluded that the measurements have discriminant validity.

Universiti Utara Malaysia

Second, is examining discriminant validity through Fornell-Larcker's criterion. Fornell-Larcker's criterion is the most conservative approach which compares the square root of the AVE with the latent variable correlations (Hair et al., 2014). As shown in Table 5.13, the values in the diagonal are higher than the other values in the same row and column; this indicates that the measurements have discriminant validity.

In conclusion, the findings on both convergent and discriminant validity have shown that all measurement model criteria have been fulfilled indicating that the measure for both reliability and validity are supported for further analysis. The next step is to assess the structural model (inner model).

Universiti Utara Malaysia

Table 5.12
Cross-Loadings

Items	Effort Expectancy	Facilitating Conditions	Learner's Intention	Performance Expectancy	Social Influences	Training
EE1	**0.891**	0.733	0.684	0.767	0.787	0.679
EE2	**0.935**	0.818	0.770	0.810	0.844	0.773
EE3	**0.928**	0.792	0.729	0.801	0.802	0.728
EE4	**0.896**	0.767	0.745	0.789	0.811	0.738
FC1	0.760	**0.878**	0.710	0.683	0.788	0.685
FC2	0.694	**0.869**	0.698	0.603	0.751	0.650
FC3	0.794	**0.896**	0.765	0.720	0.819	0.742
FC4	0.772	**0.872**	0.760	0.703	0.801	0.724
FC5	0.693	**0.847**	0.672	0.626	0.710	0.685
LI1	0.727	0.813	**0.919**	0.678	0.792	0.759
LI2	0.694	0.673	**0.874**	0.629	0.720	0.701
LI3	0.773	0.772	**0.940**	0.689	0.788	0.806
PE1	0.774	0.694	0.664	**0.908**	0.746	0.693
PE2	0.813	0.714	0.647	**0.900**	0.738	0.720
PE3	0.801	0.704	0.676	**0.924**	0.706	0.718
PE4	0.797	0.703	0.668	**0.933**	0.740	0.734
PE5	0.795	0.700	0.697	**0.922**	0.733	0.736
SI1	0.810	0.761	0.751	0.745	**0.895**	0.712
SI2	0.824	0.789	0.738	0.729	**0.919**	0.705
SI3	0.747	0.818	0.748	0.654	**0.883**	0.649
SI4	0.754	0.776	0.757	0.683	**0.868**	0.706
SI5	0.820	0.808	0.752	0.741	**0.886**	0.753
TR1	0.765	0.766	0.755	0.723	0.747	**0.895**
TR2	0.734	0.765	0.767	0.724	0.730	**0.912**
TR3	0.704	0.695	0.756	0.702	0.705	**0.919**
TR4	0.701	0.680	0.745	0.715	0.695	**0.909**
TR5	0.739	0.735	0.758	0.712	0.731	**0.920**

Universiti Utara Malaysia

Table 5.13
Fornell and Larcker (1981) Criterion

Constructs	Effort Expectancy	Facilitating Conditions	Learner's Intention	Performance Expectancy	Social Influences	Training
Effort Expectancy	**0.913**					
Facilitating Conditions	0.853	**0.873**				
Learner's Intention	0.803	0.828	**0.911**			
Performance Expectancy	0.868	0.766	0.731	**0.918**		
Social Influences	0.889	0.888	0.842	0.798	**0.890**	
Training	0.800	0.800	0.830	0.785	0.793	**0.911**

Universiti Utara Malaysia

5.10 Evaluation of Structural Model (Inner Model)

After confirming the constructs' measures are reliable and valid, the second step was to assess the structural model. The analysis involved in this evaluation were conducting the multicollinearity test, path coefficients (hypotheses testing), coefficient of determination (R^2), f^2 effect sizes and blindfolding and predictive relevance (Q^2), goodness-of-fit model.

5.10.1 Multicollinearity Test

The first step in structural model is to examine the structural model's multicollinearity. The measure to test multicollinearity among the independent variables is VIF value. VIF values indicate how much the variability of the chosen independent variable is explained by other independent variables (Hair et al., 2010). The cut-off value for VIF is 10; while tolerance is 0.10. In other words, VIF value lower than 10 or closer to 1.0; and tolerance above 0.10 indicate little or no multicollinearity problem. Table 5.14 presents the model highlighting collinearity statistics for all independent variables. The result shows the collinearity (VIF) values range between 3.57 and 7.51. This indicates that multicollinearity issue does not exist.

Table 5.14
Multicollinearity Test

Latent Variables	VIF
Effort Expectancy	7.51
Facilitating Conditions	5.62
Performance Expectancy	4.47
Social Influences	6.88
Training	3.57

5.10.2 Structural Model Path Coefficients/Relationships

In the next step, path analysis was analysed to test all generated hypotheses in the . These hypotheses were analysed using the path coefficients or Beta (ß) in the structural equation modelling in PLS software. The indicator of path coefficient determines the nature of relationship. The indicator or value can be between –1 to +1 whereby value that is near to +1 indicates a strong positive relationship and otherwise for negative value. An indicator that is nearer to 0 is considered a weak relationship and sometimes indicated a non-significant relationship. Thus, further analysis is conducted to foresee whether the relationship is positive and significant or not which is through bootstrapping by observing the t-value (Bakshi & Krishna, 2009; Chin, 2010; Davison & Diego, 2003). Similar to Beta (ß), the t-value reveals the strength of relationship where higher t-values denotes stronger relationship (Chen & Huang, 2007). It is noted that that the t-value must be larger than the critical value to confirm the significant relationship.

Universiti Utara Malaysia

Bootstrapping technique was used to obtain the standard error value in SmartPLS version 3.3.2 (refer to Figure 4.3). To run the bootstrapping, the researcher used 5,000 samples with the 306 cases. The t-values accompanying each path coefficient was generated using bootstrapping as reported in Table 4.15. When the t-value is larger than the critical value in a certain error probability, then the coefficient is considered significant. For two-tailed tests, the critical values are 1.96 at significance level of 0.05 or five percent; while 2.57 for significance level of 0.01 or one percent (Hair et al., 2014). Researchers usually refer to five percent significance level for marketing research and one percent significance level for consumer research studies (Hair et al., 2014). Other than t-value, p-value is also

reported which refers to the probability of erroneously rejecting the null hypothesis and it can be calculated by using the formula of TDIST function in Microsoft Excel. The general form for the function is: TDIST (t-value;df;tails), where the degree of freedom (df) refers to the bootstrap cases minus 1, which is 305 in this study, and the tails is 2 as it refers to two-tailed test.

In the hypotheses testing, the analyses on the direct relationship were deliberated. The five hypotheses involved were the direct relationships between performance expectancy and learner's intention, effort expectancy and learner's intention, social influence and learner's intention, facilitating conditions and learner's intention and lastly training and learner's intention. After conducting algorithm and bootstrapping, the hypothesised results were obtained. Table 5.15 illustrates the hypothesised relationship for H1, H2, H3, H4 and H5.

Table 5.15
Path Coefficients & Hypotheses Testing

Relationships	Path Coefficients β	t-value	*p* values	Confidence Interval		Decision
				LL	UL	
H1: Performance Expectancy -> Learner's Intention	-0.07	0.98	0.16	-0.18	0.05	Not Supported
H2: Effort Expectancy -> Learner's Intention	0.07	0.78	0.22	-0.08	0.23	Not Supported
H3: Social Influence -> Learner's Intention	0.35	3.30	0.00	0.17	0.51	Supported
H4: Facilitating Conditions -> Learner's Intention	0.19	2.33	0.01	0.07	0.34	Supported
H5: Training -> Learner's Intention	0.40	5.21	0.00	0.27	0.52	Supported

*significant at $p < 0.05$

Universiti Utara Malaysia

H1: There is a significant positive relationship between performance expectancy and learners' intention to use LMS.

The result shows that performance expectancy has a negative and insignificant relationship with learner's intention (β=-0.07, t=0.98). Hence, the hypothesis is not supported.

H2: There is a significant positive relationship between effort expectancy and learners' intention to use LMS.

The result indicates that effort expectancy has a positive and insignificant relationship with learner's intention where the path coefficient β is at 0.07 and t-value at 0.78. Therefore, the hypothesis is not supported.

H3: There is a significant positive relationship between social influence and learners' intention to use LMS.

Universiti Utara Malaysia

There were a positive and significant relationship between social influence and learner's intention where the β revealed positive value and t-value is above the critical value (β=0.35, t=3.30). Therefore, the hypothesis is supported.

H4: There is a significant positive relationship between facilitating conditions and learners' intention to use LMS.

Result showed that facilitating conditions has positive and significant relationship with learner's intention (β=-0.19, t=2.33). Hence, the hypothesis is supported.

H5: There is a significant positive relationship between training and learners' intention to use LMS.

The result presented that training has positive and significant relationship with learner's intention (β=0.40, t=5.21). As for this result, the hypothesis is supported.

Based on this result, it can be concluded that hypotheses H1 and H2 are not accepted or supported; while hypotheses H3, H4 and H5 are accepted and supported.

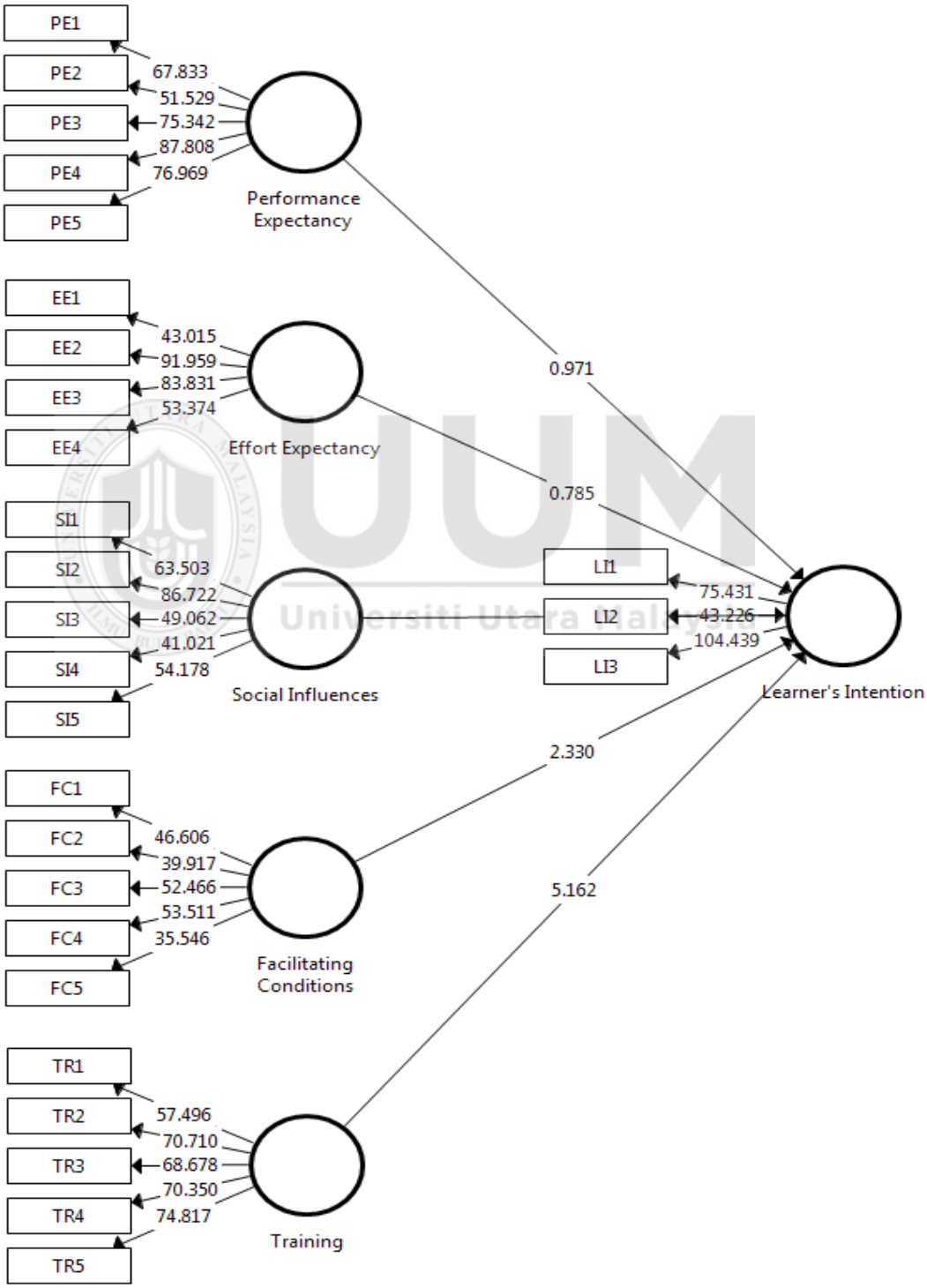

Figure 5.3
Path Model Significance Results (Bootstrapping)

5.10.3 Coefficient of Determination (R^2 Value)

Besides analysing the path coefficients, the value of coefficient of determination or R^2 value was determined. R^2 value is a measure of the model's predictive accuracy and shows the amount of the variance explained in the endogenous variable by all exogenous variables which are linked to the endogenous variable (Hair et al., 2014). Based on the results of the path model in Figure 5.4, the value of R^2 for learner's intention is 0.79 suggesting that 79.0% of variance of learner's intention could be explained by performance expectancy, effort expectancy, social influence, facilitating conditions and training. According to Hair et al., (2014), the R^2 value ranges from 0 to 1, where value equal or above 0.75 is considered substantial; .and 0.50 or 0.25, respectively described as moderate or week. Therefore, it can be concluded that R^2 value for learner's intention is substantial.

Universiti Utara Malaysia

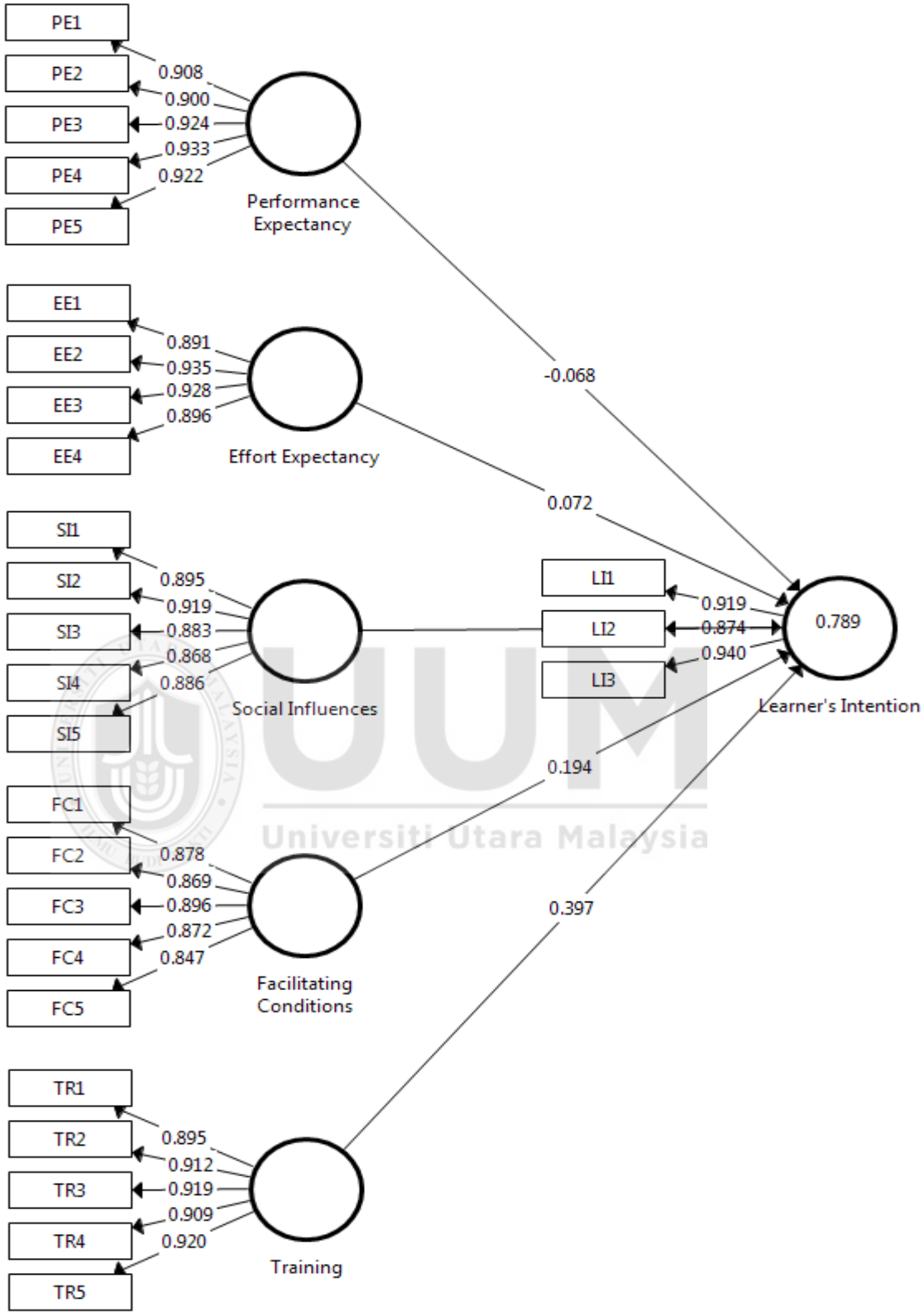

Figure 5.4
Coefficient of Determination (R2)

Universiti Utara Malaysia

5.10.4 Effect Size (f^2)

Then, the effect size (f^2) was examined. Effect size (f^2) is the change in R^2 value when a particular exogenous construct is deleted from the model (Hair et al., 2014). This is to evaluate whether the deleted construct has a substantive impact on the endogenous construct (Hair et al., 2014). The effect size can be calculated as:

$$f^2 = \frac{R^2\ included - R^2\ excluded}{1 - R^2\ included}$$

According to Cohen (1998), the f^2 values of 0.02 represent small effect; while 0.15 represent medium effect; and 0.35 represent large effect. As shown in Table 5.16, performance expectancy (f^2=0.00) and effort expectancy (f^2=0.00) have no effect on learner's intention. On the contrary, social influence (f^2=0.08) and facilitating conditions (f^2=0.03) have small effect on learner's intention. Lastly, training (f^2=0.21) has medium effect on learner's intention.

Universiti Utara Malaysia

Table 5.16
Effect Size Rating

Construct	R^2	f^2	Effect Size Rating
Learners Intention	0.79		
Performance Expectancy		0.00	No Effect
Effort Expectancy		0.00	No Effect
Social Influence		0.08	Small Effect
Facilitating Conditions		0.03	Small Effect
Training		0.21	Medium Effect

5.10.5 Blindfolding and Predictive relevance/ predictive accuracy (Q^2)

Next, a measure of predictive capability is required for prediction purposes. In order to examine the predictive accuracy, Stone-Geisser's Q^2 value was examined (Hair et al., 2014). In SmartPLS version 3.3.2, blindfolding procedure is the suggested approach to test predictive relevance. Blindfolding is a sample reuse technique where data were removed from the data set based on the pre-determined distance value (D) in the endogenous construct indicators and estimates the parameters with the remaining data points and removal data is handled as missing value (Hair *et al*., 2014). As a result, a general cross-validating metrics Q^2 is produced.

Q^2 value refers to the capability of the path model in predicting the originally observed values (Hair et al., 2014). Q^2 value can be calculated in two different ways. The cross-validated redundancy is the data prediction of both structural model and measurement model and therefore fits the PLS-SEM perfectly. Cross-validated communality uses only the construct scores estimated for the target endogenous construct to predict the removal data points. Hence, cross-validated redundancy as a measure of Q^2 is recommended and applied in this study.

According to Fornell and Cha (1994), a cross-validated redundancy value greater than 0 indicates that there is predictive relevance; while a value less than 0 indicates the model lacks predictive relevance. As illustrated in Table 5.17, the cross-validated redundancy and cross-validated communality for intention to switch are 0.49 (see Figure 5.5) and 0.73 (see Figure 5.6). Since the Q^2 values are more than 0, it indicates that the model has an adequate predictive relevance.

Table 5.17
Quality Indicators of the Model

Variable		SSO	SSE	Q^2=(1-SS E/SSO)
Learner's Intention	Cross-Validated Redundancy	975.000	352.090	0.64
	Cross-Validated Communality	975.000	368.071	0.62

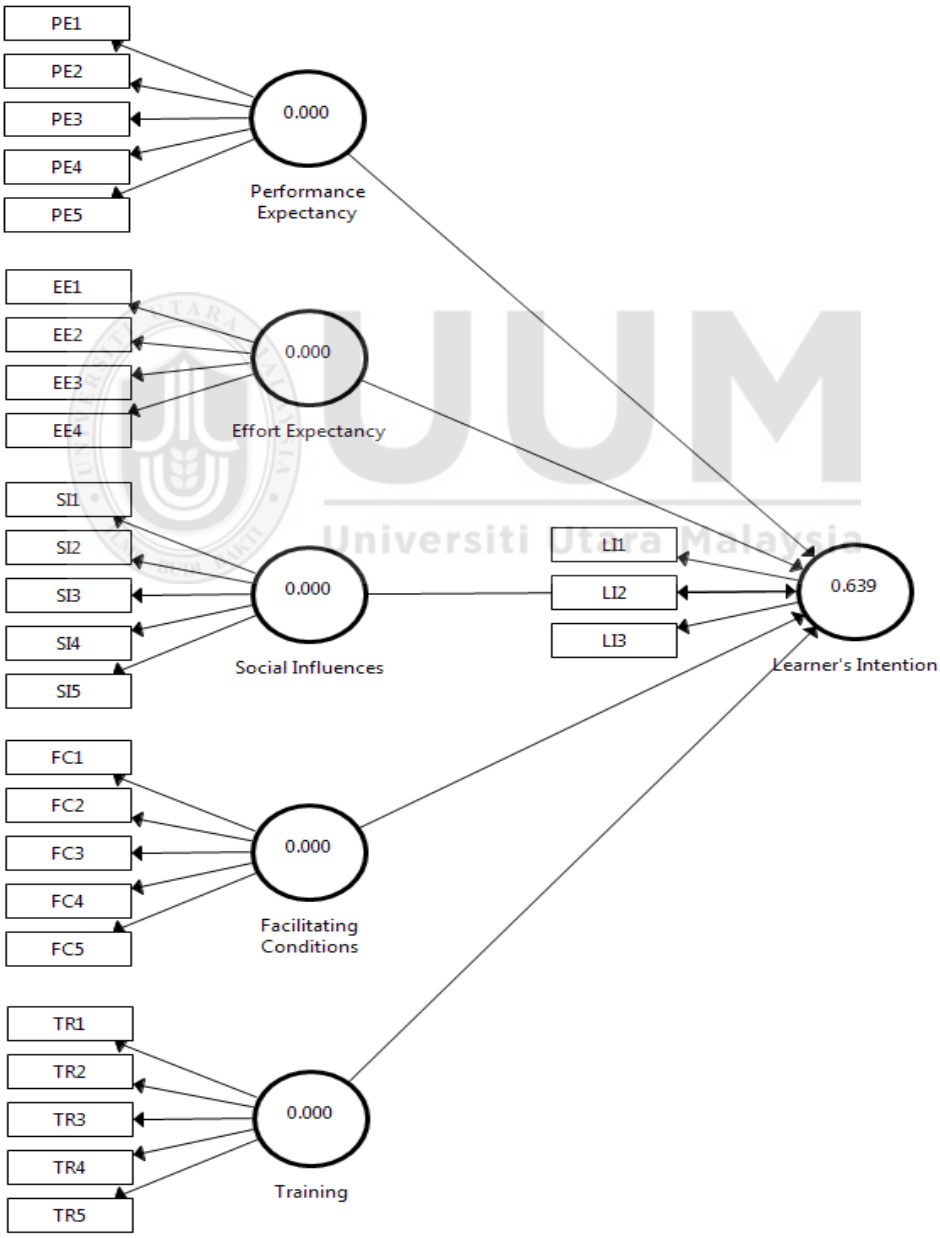

Figure 5.5
Cross Validated Redundancy

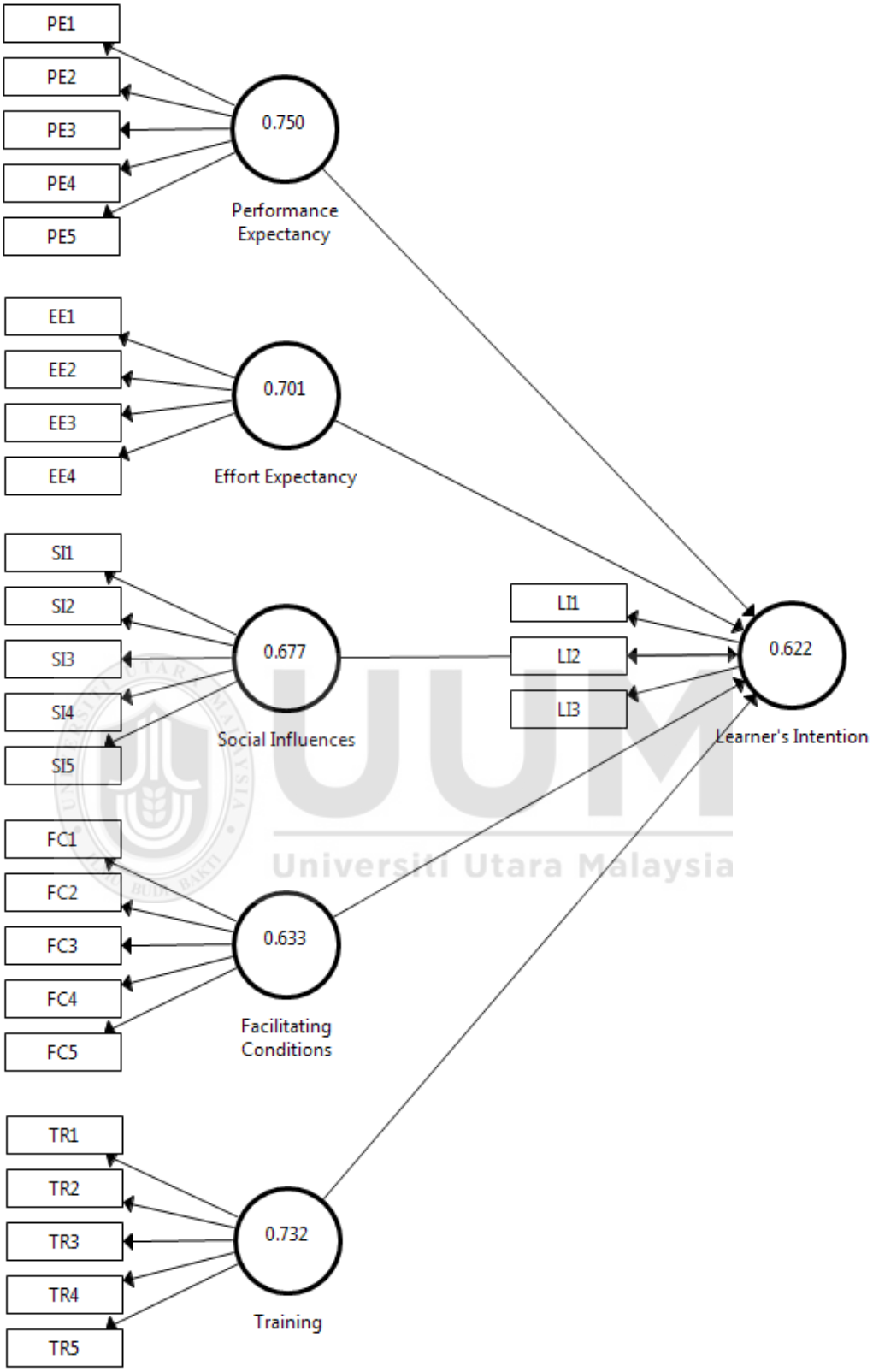

Figure 5.6
Cross Validated Communality

Universiti Utara Malaysia

5.10.6 Goodness-of-Fit (GOF) Index

Finally, the GOF Index was examined. GOF is used to predict the model fitness. Furthermore, this test is somehow used to value the PLS model. These indicators were used as guideline to determine the goodness of fit such as GoF small = 0.1, GoF medium = 0.25 and GoF large = 0.36. In this study, since the GoF value is 0.89, this illustrates that the model has a good model fit.

5.10.7 Summary of the Findings

Based on the analysis of the data reported in this chapter, the results are shown in Table 5.18.

Table 5.18
Summary of the Findings

Hypothesis	VIF	Decision
Hypothesis 1	H1: There is a significant positive relationship between performance expectancy and learner's intention to use LMS.	Not Supported
Hypothesis 2	H2: There is a significant positive relationship between effort expectancy and learner's intention to use LMS.	Not Supported
Hypothesis 3	H3: There is a significant positive relationship between social influence and learner's intention to use LMS.	Supported
Hypothesis 4	H4: There is a significant positive relationship between facilitating conditions and learner's intention to use LMS.	Supported
Hypothesis 5	H5: There is a significant positive relationship between training and learner's intention to use LMS.	Supported

Universiti Utara Malaysia

5.11 Chapter Summary

This chapter demonstrates the analysis and findings for this study. This study employs PLS-SEM as the major analysis technique since SEM is a very powerful analysis and has become the first choice to analyse complex models. Before testing the model of the study, the response rate was calculated. Then, SPSS was used to analyse the demographic profile of respondents, and followed by data screening and cleaning (i.e., data entry errors and multi-collinearity). After that, descriptive analysis (i.e., demographic profile of respondents) was presented.

Next, the analysis of measurement model and structural model were performed. SmartPLS version 3.3.2 was used as a tool to run the analysis. In the first stage (i.e., measurement model or outer model), the validity and reliability of the items used for each construct were assessed. Under measurement model, both convergent and discriminant validity were satisfied and met all requirements. Then, in the next stage (i.e., structural model or inner model), the hypotheses were tested and the relationships between the constructs were assessed. According to Hair et al. (2014), there are five steps to assess the structural model. First, the collinearity of the structural model was assessed. Then, the structural model path coefficients. After that, the coefficient of determination (R^2), and followed by the effect size (f^2). Finally, the predictive relevance (Q^2) through blindfolding was assessed. After analysing the two stages, the moderating effect were carried out through bootstrapping procedure.

As shown in the various analyses above, three hypotheses are accepted, and two hypotheses are rejected. Among the five hypotheses, the results indicate that all three direct effects are supported and significant. The three direct relationships are social

influence, facilitating conditions and training. The detailed discussions of the findings are in the next chapter.

Universiti Utara Malaysia

CHAPTER 6

DISCUSSION AND CONCLUSION

6.1 Introduction

This chapter further builds on the previous chapters by presenting in-depth discussions and interpretation of the research findings concerning objectives, research context, recent literature, and underlying theories. The study aims to communicate the research findings in perspective and present the research conclusions with theoretical and practical implications. Finally, the chapter lays forward the recommendations for future research.

6.2 Recapitulation of the Study

To examine the factors affecting TM's LMS use, this study employed a quantitative approach based on Venkatesh et al. (2003)'s Unified Technology Acceptance and Use of Technology model (UTAUT). However, the present study utilised the simplified version of the model because the new LMS is still at an implementation stage. This research also looked at training as a new independent variable of the UTAUT model since it is one of the factors in improving the use of LMS adoption (Nyandoro, 2016).

Based on a comprehensive literature review and consideration of the current study's context, the researcher proposed five direct determinants of learners' intention. Performance Expectancy, Effort Expectancy, Social Influence, and Facilitating Conditions are four of the direct determinants adapted from UTAUT. In addition, as a concept expansion, training was applied to the UTAUT model. All of these direct determinants were hypothesised to have a strong positive correlation with the learner's

Universiti Utara Malaysia

intention. As an outcome, the hypothesis testing result of this study showed that not all determinants were accepted to correlate with behavioural intention positively. The following discussion compared the results regarding past studies and highlights contextual similarities and differences.

6.2.1 Effect of Performance Expectancy on Learners Intention

The researcher hypothesised that learners' performance expectancy would be related to their behavioural intention to use the LMS. However, no empirical support was found for the hypothesis. This study showed that learners' behavioural intentions to use the LMS were unaffected by performance expectancy. In other words, TM employees did not consider the usage of LMS to enhance their operational performance. This result contradicts several past studies that examined a similar relationship (Abu Bakar, 2015; Chauhan & Amelia, 2017; Karimzadeh et al., 2017; Oumlil et al., 2013; Yamin & Lee, 2010).

Universiti Utara Malaysia

The results showed is not unexpected, going by the numbers of LMS users recorded in previous years. From the findings, only ten per cent opted for the digital learning concept via LMS. The rest of the participants still prefer to use the conventional learning method (instructor-led training). Instructor-Led Training (ILT) is still the number-one choice for the learners in TM as it is the most common way to acquire new knowledge, and the learners are accustomed to it. Attending an ILT session will allow them to concentrate and focus on the trainer's subject. It is likely that without the interruption of their everyday task, learners feel more comfortable in their learning process. Furthermore, the ILT session is conducted in a conducive classroom with all the required settings.

Unfortunately, the learners in TM did not believe the LMS can produce the same outcome as an ILT session. The assumption of the learners is due to a few reasons. Firstly, the setting for online learning in TM was minimal and not conducive, especially for TM offices in rural areas. TM has many rural offices throughout the country and these offices are not yet connected with TM fibre network, and being in the rural area, the broadband coverage is not very efficient.

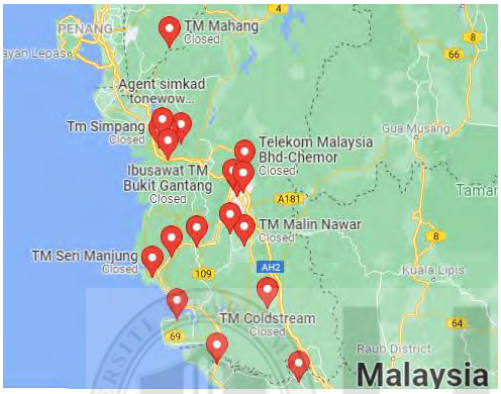

Remote Exchanges in Perak

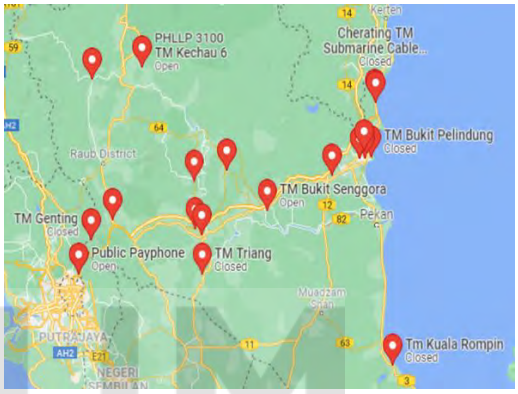

Remote Exchanges in Pahang

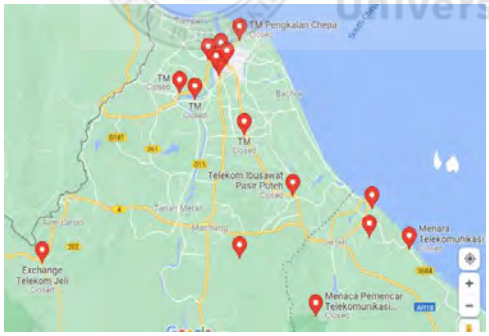

Remote Exchanges in Kelantan

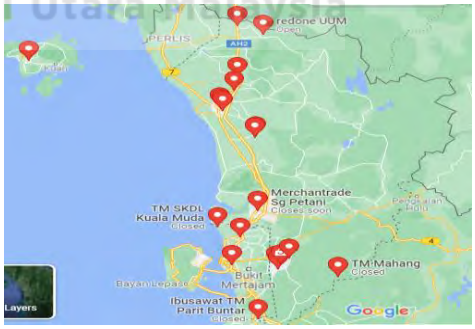

Remote Exchanges in Kedah

Figure 6.1

Example of the location of some TM remote exchanges

Figure 6.1 above showed some of the remote TM exchanges in the states of Perak, Pahang, Kelantan and Kedah. As the national telecommunication provider for the country, TM has many remote exchanges in all the states in Malaysia. TM

employees are working in these remote exchanges especially in the hill station on a three-day shift basis. These means that they are working at the remote exchange for three days and they will get two-day off. After the three-day shift, they will be replaced with a new team, that will undergo the same shift routine. There will be approximately five to ten workers in one shift. To explain the situation better, if there were ten workers in one remote exchange, and there was an average of twenty remote exchanges per state, the calculation would be as below:

a) 14 states x 20 remote exchanges = 280 remote exchanges
b) 280 remote exchanges x 10 staff = 2800 employees.

The calculation above portrays an average assumption of the number of TM employees working in remote exchanges with minimum internet connection.

Additionally, most of the learners from the field operation team were not equipped with a laptop. Even if they were provided with a computer, the device was customised only for engineering works. It was difficult for them to regularly access and use the LMS, which made them disbelieve in LMS's credibility to improve their operational performance. Over time they became reluctant to use the LMS and opted for the ILT session instead.

Secondly, there were not many LMS users in TM; therefore, the learners were not subjected to social influence from people close to them, such as supervisors, peers, subordinates, friends, etc. As shown by the result of the demography test, most of the employees in TM belong to the millennial age group. These age group could be categorised as techno savvy based on their involvement in technology usage (De_Labriolle, 2020). However, they did not believe in the capabilities of the LMS

Universiti Utara Malaysia

as a tool for knowledge. Perhaps, no success stories from the LMS usage had been shared with them.

With this lack of information, TM learners were more convinced that the best way to acquire knowledge was via ILT sessions. The research finding supports Marchewka and Kostiwa's (2007) study. They showed that, despite perceiving that LMS is a useful and productive tool for learning, the university students did not think that their use would enhance their performance. It is the same case with TM, where the learners perceived LMS as a useful tool for learning but did not believe it could help them improve their operational performance.

6.2.2 Effect of Effort Expectancy on Learner's Intention

The second hypothesis was that the learner's behaviour intention is influenced by effort expectancy. Unexpectedly, the result did not show any significant link. The current study found no evidence that effort expectancy helps people to develop the desire to use. This observation, on the other hand, is consistent with the results of a few previous studies. When it came to 3G mobile adoption in Taiwan, Wu et al. (2007) found a similar result: there was no significant correlation between effort expectancy and purpose. A similar conclusion has been reached in several previous studies (Rahmaningtyas et al., 2020; Slade et al., 2015).

From the result of the demographic analysis as shown in table 5.2, it can be seen that the highest number of TM employees belongs to the age group between 31-40 years old with a percentage of 47.5%. This means that most of TM employees were born in the 80's and 90's. In other words, they belong to the millennial generation and millennial's were said to stand out for their technology use (Vogels, 2019).

Since TM workers were tech-savvy and not easily threatened by using the new technologies, effort expectancy had an insignificant impact on the users' intention. This notion could also be attributed to the result of the digital transformation programme introduced by TM in 2015. Through this transformation, TM has developed various programmes that emphasise on up-skilling of the employees. Since 2015, TM has offered formal training programmes for all employees, from new hires to retirees. TM has ensured that its employees are given adequate training and growth opportunities to reach their full potential. In building a professional and effective workforce and boosting customer experience, creative learning solutions and training programmes have been developed and delivered. These efforts are aimed at strengthening employees' digital capabilities, attitude shifts, technology skills, Information and Communication Technology (ICT), and leadership skills (TM Annual Report, 2016).

Universiti Utara Malaysia

The digital transformation programme is still ongoing until now. TM's digital transformation path includes reshaping workforce skills in addition to overhauling structures and processes. As disruptive cycles intensify, TM employees' continuous and relevant upskilling is crucial for the company's future. TM takes a comprehensive approach to talent creation, offering training programmes that equip workers with the skills they need to advance in their careers and contribute to its growth. TM is cultivating a capable and stable workforce that is adaptable to change (Hisham, 2019). Looking back at the findings of this study and TM's effort towards digitalisation, it is clear that TM has effectively executed its digital transformation programme and produced a resilient workforce. TM's crew is

likely prone to technological change, and working out the LMS does not pose a challenge to them.

6.2.3 Effect of Social Influence on Learner's Intention

According to the third hypothesis, social influence has a significant impact on a learner's behaviour intention. The results revealed a significant correlation, as predicted. The findings of this study indicate that social influence aids in the development of a desire to use. The findings are similar to those of several previous studies on the subject. For example, Abubakar and Ahmad (2014) discovered a strong connection between social influence and common fitting room usage among Chinese shoppers. In a different study, Wu et al., (2013) found a significant link between social influence and purpose in their study of I-Pass acceptance among Taiwanese travellers.

From the result of this relationship, the researcher trust that TM's learners had consented that their superiors and the management think they should use LMS. This notion is based on the significant result acquired by this study. In the questionnaire section for social influence, the users were prompted to see whether they realised that the superior and TM's management would want them to use the LMS. Additionally, they were asked whether they would consider using the LMS if they see close people (peers, subordinates, friends, etc.) around them using it. The positive result retained proved that the learners strongly believed that social influence would enhance their intention.

However, from the researcher's observation, not many promotions on the LMS had been done by TM's management. Despite recognising the management's

Universiti Utara Malaysia

direction for the LMS usage, the employees believed that using LMS was helpful but not essential. Other than influenced by the management, learners' intention could also be enhanced further with the social influence from peers, subordinates, and others surrounding the users. Unfortunately, as one of the learning and development unit members, the researcher noticed no active LMS users in TM. Most LMS users were from the learning development unit, which comprised trainers and a training management unit. Hence, TM learners did not experience social influence from their surroundings, making them reluctant to use the LMS. According to Alshehri et al. (2019), in general, learners are inclined to be influenced by people's emotions, opinions, and behaviours, which eventually affects their technology adoption decision. Learners can consistently see the LMS's advantages by observing peers collaborating and trying new tools and believing that digital learning is necessary to prepare them for new knowledge. Learners need to see the benefits of using the LMS as a crucial step for them to adopt the system (Alshehri et al., 2019). Therefore, it is appropriate to conclude that social influence is an essential element in improving intention.

Universiti Utara Malaysia

6.2.4 Effect of Facilitating Conditions on Learners Intention

Facilitating conditions have a significant impact on the learner's behaviour intention, according to the fourth hypothesis. As expected, the result showed a significant link. The present study provided empirical support that facilitating conditions encouraged learners to develop the intention to use. In this study, Facilitating Conditions (FC) are described as the employees' perceptions of how well the organisation supports their use of the LMS. FC can be the factors directly involved in using a system, including the technical infrastructure, support, and the

environment for using the Learning Management System (LMS) (Akbar, 2013; Lee et al., 2016). It is likely that in situations where the enabling factors function as a deterrent, people will change their behaviours negatively to suit the situation. Individuals who receive adequate care, on the other hand, are more likely to build positive attitudes because there are fewer reasons to refrain from engaging in the behaviour (Venkatesh et al., 2011).

This study's findings also proved that learners in TM agreed that facilitating condition is essential to encourage the learners' intention. They also decided that TM had the appropriate resources, and supported for the learners to utilise the LMS. Therefore, the study results suggested that TM's facilitating condition is adequate and is not an inhibitor for the learner's intention. The explanation for the low use of the LMS by the learner in TM was most possibly due to the participant's work nature. For instance, in this study, participants were from the ITNT unit where their daily task mainly involved fieldwork. When attending to their daily fieldwork task, they did not have the opportunity to use the LMS. Additionally, the IT network condition outside of the TM premise was sometimes unpredictable, making it harder for the learners to engage with the LMS.

In terms of the ability to use the LMS, the participants believed they had the knowledge to navigate through the system, and they stated that it would be easier for them to use the LMS if they were given specific instruction. The participant's desire to use the LMS is most likely hampered by their work's participatory nature and workload. The participant would like detailed instructions on how and when to use the LMS from TM management.

Universiti Utara Malaysia

6.2.5 LMS Training Effect on Learner's Intention

The fifth hypothesis was training. The learner's behaviour intention is significantly influenced by training. As expected, the result showed a significant link. The current research was able to show that training helps learners to establish intentions. Training is described in this study as the acquisition or transfer of knowledge, skills, and abilities (KSA) to TM employees for them to perform a specific activity or function using the new LMS (LEARN) (Milhem et al., 2014).

As a result, the advantages of training for both organisations and individuals are strategic and much more extensive. The findings showed that TM's learners strongly believed that they would use the LMS services with a good training session. Furthermore, the participants strongly believed that training would encourage them to use the LMS provided that the organisation equips them with a suitable training programme. By attending a good training programme, the participant believed that they would be more comfortable using the system to its full potential. In general, users need more attention to familiarise themselves with the essence of LMS.

Although the TM learners are IT literate, they will always be anxious and unwilling to try something new. This fact is proven by research conducted in Australia, where worries about the absence of skills and understanding and the need for individual growth and training were among the major problems that affected the willingness to use the LMS (Alias & Zainuddin, 2005). In general, people will fear what they do not understand. It is also possible that the learners in TM had a fear of failure in using the LMS. The findings of Shuhaiber (2016) and Alias et al. (2005) highlighted that users' literacy and understanding of the

Universiti Utara Malaysia

system is one of the prominent elements influencing the users' willingness to use a system.

6.3 Implications of Research

The current study has many theoretical and practical implications. These contributions and impacts are discussed further below.

6.3.1 Theoretical Implications

Established technology adoption constructs related to end-user involvement in training programmes were defined and analysed in this study. The Unified Theory of Acceptance and Use of Technology (UTAUT) model predicted that analysing technology acceptance constructs and their fit with current training paradigms would substantially increase users' behavioural intention. After that, the model was tested to see if it could be enhanced by adding a training reaction construct to an expanded model that describes the relations between training paradigms and current technology acceptance constructs in the UTAUT.

In the last few decades, a technological transformation akin to the well-known industrial revolution of the early nineteenth century occurred (Harris, 2016). This technological transition has drastically changed business and the resources needed to succeed in today's world. Efficiency impacts should be weighed before investing precious resources in costly information technology, given increased competition and demand for emerging technologies. It is no longer possible to manage the transition that comes with any technical purchase and implementation. However, the majority of researchers believe that training is critical to the success of any new system's implementation. Unfortunately,

training is often seen as "separate and distinct from something that adds bottom-line value to the organisation" (Kirkpatrick, 2007, p.37). It is one of the first budget items to be eliminated (Vatanasombut et al., 2008). Although the importance of training to learn new technologies is discussed in the literature on information management, research on the use of training in technology adoption models has been largely ignored (Harris, 2016). The majority of the studies examined used cross-sectional data collected after the technology was applied or longitudinal studies performed without pre-training conditions (Harris, 2016). In this report, the researcher expanded the UTAUT model to give managers a lot more information about the strategies that would most successfully manage technology acceptance.

Despite the rational presumption that training is linked to technology adoption, the views surrounding the training are still inconclusive (Marler et al., 2006). Instead, the broader topics of external factors or enabling circumstances are used to collect such data holistically. The current research describes and investigates existing technology adoption frameworks in the context of technology-focused training programmes. While what constitutes a theoretical contribution is still a debatable subject. Whetten (2009) stated that the novel theory formulations or expansion of current ones contribute to the theory. Among the things that constitute an original doctorate work include synthesising earlier fragmented and adding constructs to existing theory (Estelle & Derek, 2005).

6.3.2 Practical Implications

The first set of practical recommendations in this study is for managers of new LMS initiatives in TM, specifically, and e-services, in general. User adoption is

the most difficult aspect of implementing new technologies (Wang & Shih, 2009). Therefore, understanding what inspires user intention to accept and use the LMS is a significant contribution. This research's major contribution can be viewed from the angle of being a pioneering work that investigates LMS acceptance determinants in a Government Link Company (GLC) in Malaysia. The study enables the understanding of LMS adoption and implementation based on Malaysian user's perspectives by revealing the critical success factors. This research could equip the management with crucial information about the essential factors influencing user behaviour on LMS acceptance in Malaysia. Based on these factors, TM management could develop and improve the acceptance of the newly implemented LMS. The findings have reinforced the role of behavioural intention as the fundamental driver in technology acceptance research. The results show that social influence, facilitating conditions, and LMS training have a significant impact.

Universiti Utara Malaysia

In general, the current research showed that the proposed modification to the UTAUT model is valid in non-western culture. This demonstrated that the aggregate model of UTAUT is dynamic and can examine user's acceptance in different cultural contexts. The modification of UTAUT in this study could be considered a contribution, and this study suggests that introducing additional variables could improve the UTAUT model's supremacy. It is expected that this finding would be of interest to technology developers, especially in Malaysia.

The empirically validated model provides a framework for stakeholders to develop, implement, and promote LMS acceptance. The model could offer constructive support for organisations to plan, implement and encourage better

users' acceptance of LMS in the current research context. The empirical evidence presented in the findings will undoubtedly help maintain the existing projects and serve as a guiding principle for further LMS implementation. The model could also be applied to other similar developing countries.

6.4 Recommendations for Telekom Malaysia

In the current study, the participants have expressed their confidence that LMS usage will increase with social influence, facilitating conditions, and training. Therefore, TM management should examine further in the context of these areas. For example, in the context of social influence, TM should identify what type of social influence provides the most significant impact on the user's behaviour intention to use technology and how far social influence can increase the rate of technology adoption.

To improve the learners' social influence experience, the researcher suggests that LMS lessons must be planned in groups. In social influence, group membership legitimises actions, and the groups' rules of practice guide the individual. Social influence leads to technology adoption (Vannoy & Palvia, 2010). The strength of social influence is evident, especially in technology adoption in certain situations like in text messaging, outpacing voice mobile and calling, and emailing. Similarly, traditional music media sales, such as CDs, are declining as the number of music downloads and uploads via P2P networks increases (Vannoy & Palvia, 2010).

Conversely, participants with only limited or no use of the LMS often cited reasons relating to a lack of human interactions, lack of help from team or team participation, little or no experience with observing peer utilisation of the LMS, and limited knowledge of available features of the LMS (Boothe, 2017). These findings suggested

Universiti Utara Malaysia

the management's need to concentrate on offering more possibilities for social interaction, such as providing roadshows to promote LMS use. During the roadshows, the LMS target users will have the opportunity to explore the system, allowing them to have hands-on experience on handling the system and face-to-face training to incorporate the new technology in the future. The training can help learners comprehend the LMS features, understand the benefits, and learn how to utilise the available resources. Ambassador for the LMS should also be appointed among the target users of every level, non-executive, executive, manager, and top management in every unit, division, state, and region. The ambassador will become a role model for LMS users and continue to promote LMS use among the learners in TM. It is essential for management in TM to understand the power of social influence for users' positive outcomes, such as using the LMS. Against this background, TM management should take advantage of social influences to motivate and enhance LMS usage. Thus, management can prioritise and encourage social influences through their policies and practices.

Universiti Utara Malaysia

For social influence to be genuinely useful, it would have to reach and cause behavioural changes among people who hold different beliefs (Polonski, 2015). Based on these notions, organisations have to design an effective intervention to improve social-influence mechanisms to be used for the vast good. Polonski (2015) in a World Economic Forum in China, suggested three strategies to improve social influences. Firstly, it is to design selective exposure to reference groups with desired behaviours. People like to see how other people like them have handled a particular situation. It was the subject of a recent study at the University of Pennsylvania where the study results implied that behaviour could be affected by social aspiration, which could be an effective strategy for encouraging a range of positive behaviours, including adopting a

new system (Polonski, 2015). In this regard, to motivate people to use the new LMS, the researcher suggests that organisation (TM) should facilitate the new users' exposure to other people who are using the LMS regularly. A group of employees who are highly experienced with the LMS must be formed. These highly experienced people will share their knowledge and promote the use of the new LMS.

Secondly, it is to design selective exposure to early opinions to inspire herding effects. For decades, social psychologists have theorised that human like to mimic the behaviours of others. Computational social scientists have now confirmed that this is happening online; at an unprecedented scale, people tend to like things if they see others have enjoyed it before (Polonski, 2015). In a randomised, controlled trial on a news-aggregation website, a team of MIT researchers experimented with the initial number of likes and comments on a group of stories. They found that early reviews drove subsequent ratings (Muchnik et al., 2013) The implication, therefore, is that an idea with a small group of initial supporters could set the tone and narrative for ensuing discussions (Polonski, 2015). The researcher suggests that TM utilise this strategy as the new LMS is still in the organisation's early stage of technological interventions. TM could share the positive experience of early users of the system and set the new LMS trend.

Lastly, is to design incentives to foster peer-to-peer influence explicitly. There are well-known rules for creating incentive schemes. Referral marketing strategies have worked well in specific contexts. Still, when it comes to mobilising groups of people around a particular task, there are more effective ways to apply social influence (Polonski, 2015). For example, in a Network Challenge in 2009, competing teams of scientists were asked to locate ten red weather balloons in different locations around the US. Using a

Universiti Utara Malaysia

recursive incentive structure to mobilise a group of volunteers, the winning team could find all the balloons in less than nine hours. How did they do it? They devised incentives that motivate people to forward the message to their peers, promising to share the $40,000 prize up the chain of all those who spotted a balloon (Pickard et al., 2011). Identifying the right incentive structure is essential to activate large groups of people. To drive the LMS adoption, TM has to devise a suitable incentive programme for its employees. The right incentive programme will make sure TM achieves the desired target. Based on this information, the researcher recommended that TM management apply the same approach as Polonski (2015) suggested.

For facilitating conditions, TM management should identify what facilitating condition matters the most to the user to persuade them to use particular technology and, possibly used facilitating as a moderator to some demographic criteria such as age and educational background. It is likely that, TM learners were mainly concerned with getting online support to address LMS's potential risk. For this, the researcher strongly urged the LMS project team to properly plan the system's implementation to facilitate users' preferences better. Therefore, the researcher would like to suggest an in-depth study to be conducted throughout the organisation to undertake this issue and gather precious insights to better understand the concerns of the user. Based on the previous research by Boothe (2017), there are two categories of adoption, namely (a) system change and (b) product utilisation. These categories emerged two subcategories: (1) Developer Based Theories and (2) Adopter Based Theories.

The developer-based theories concentrate on technology efficiency, effectiveness, and elegance, where the adopter theories focus on the users' social and interpersonal features (Boothe, 2017). Both aspects of technology and human user elements are

Universiti Utara Malaysia

involved in the development of LMS. Organisational leadership and change agents must rely on both pieces of knowledge to maximise the innovation's success. Technology developers often convey technology efficiency, effectiveness, and elegance, but the adopter-based theory's human, social, and interpersonal user elements are often ignored. In this analysis, likely, the key objective of the implementation of the new system is not the aspect of the human user component. The organisations should improve various methods for providing LMS support services such as an inquiry hotline, interactive service demos, and user instructions in plain text or social media. With the amount of work, time, and risks involved, many learners would be careful to invest time and effort in a new learning management system. Also, the customer must be convinced that the system would be easy to use. Reliable technology would be available, problems would be quickly resolved, examples of practical courses and techniques would be made public, time and workload would be taken into account, and continued assistance would be offered. In assuring a quality implementation approach for the LMS, all of these items must be combined and not isolated from one another.

Furthermore, the researcher recommends that a helpdesk is set up in every state to resolve access or utilisation problems. Having a helpdesk close to the learners' facility would help the learners feel more comfortable using the LMS. TM could promote online help videos that the learners can refer to when the need arises. LMS developers should appoint change agents among the learners to encourage team teaching. Having the learners teach other learners would create a sense of trust and comfort in using the LMS. Trust is the key to any successful and long-term relationship. In an online context, it becomes even more critical due to many uncertainties in the digital environment (Lal, 2017). TM must build trust among the employees in the LMS. Trust in technology and trust in people will determine outcomes of interest such as satisfaction with the overall

Universiti Utara Malaysia

interaction, the person involved in the exchange, the technology used for the interaction, and intentions for repeated interactions and repeated use of the technology (Miller, 2015).

Moreover, technology errors can always delay progress, but coherent technical mistakes are often enough to dissuade even well-meaning people. Minimising these mistakes should be a priority for TM management before producing complete execution, as facilitating conditions also means having a reliable system. Investing in this issue upfront may result in maximising adoption among TM staff and ultimately benefit the organisation. TM management needs to maintain continuous communication from the population through surveys, interviews, and focus groups to gather data on new problems that may occur and keep an open communication line to understand the "why" or the value and benefit of adopting the new LMS. It is of paramount importance to gain buy-in and commitment from the learners towards the new LMS to win their interest in using the new LMS.

Universiti Utara Malaysia

Training is a new construct introduced in this study as an extension of the original UTUAT model. With a limited number of models that explore both the impact of training and intentions to use technology both before and after training, valuable insights can be gleaned from this study's results to guide practitioners. TM should conduct a study to test the influence of training on increasing technology adoption and possibly identify what type of training has the most influence on technology adoption (Marshall et al., 2008). For example, comparison can be made between virtual instructor-led training, classroom training, training videos via online content, etc.

Farias and Resende (2021), in their study reinforce the importance of training combined with organisational support for the adoption and use of new technologies. Their study

also points out that when implementing new systems, it is essential that they are easy to use and useful for the work of the employee who will use the system (Farias & Resende, 2021). TM management should consider these aspects when designing a system. The adoption by the users will be facilitated, even more if it is combined with training that provides usage guidance. By reinforcing the importance of conducting training when implementing new technologies, the user's will be adequately prepared to handle new systems (Farias & Resende, 2021).

TM is one of the highest contributors to the Human Resource Development Fund (HRDF). HRDF is the initiative developed by the Malaysia Ministry of Human Resource to encourage organisation in the country to build their internal resource by providing training to the staff members and facilitating training needs. The initiative includes preparing a laboratory or classroom for a conducive learning condition that comprises buying a new computer for knowledge dissemination. TM contributed approximately RM14 Million yearly to the HRD Fund. However, less than 60 per cent of the amount could be claimed back (Telekom, 2020). The researcher suggested that TM should utilise this fund to provide better facilities for LMS users. This way, TM will promote better encouragement to the user and, at the same time, increase the HRDF claimed rate.

Universiti Utara Malaysia

6.5 Limitation of the study

This research is a pioneering study that attempts to assess LMS acceptance determinants in government link companies (GLC) in Malaysia. Therefore, it becomes necessary to highlight several limitations related to the study as follows:

a) Since this is a ground-breaking study on LMS acceptance in Malaysian GLCs, further research is required to validate the findings.

b) The results obtained were mixed, and full support was not acquired for all the hypotheses. Additional research is required to resolve the Performance Expectancy and Effort Expectancy hypothesis.

c) Also, the study has primarily focused on a cross-sectional research design conducted within the shortest timeframe. The main advantage of adopting this technique in the current research is related to time and cost-effectiveness. Due to time constraints and the limited funds, the researcher could not collect the data several times.

d) The key factors identified as the determinant of user acceptance of LMS in TM (Social Influence, Facilitating Conditions and Training) could change over time and varies across different cultures. Thus, a longitudinal or in-depth research is required to ascertain the dynamic nature of these factors fully.

Universiti Utara Malaysia

e) The study focuses only on the perspective of the users in acceptance of LMS. Thus, understanding the wide acceptability of LMS is incomplete. Further research could also assess the LMS acceptance from the perspective of an organisation (such as the LMS stakeholders, including management staff.

f) The proposed model is limited to LMS and GLCs in Malaysia; caution should be made to generalise the model in another context.

6.6 Recommendations for Future Research

Some suggestions for future research arose from the limitations observed from the current work. Future research could overcome several limitations by adhering to the followings:

a) First, more research is required to see if the model of user intention against LMS can be tested in a different cultural context and if a similar result can be obtained.

b) To ascertain the interplay among the factors. Future research should study other Malaysian GLCs' because this research's scope is restricted to LMS in TM only.

c) Future research may involve other theoretical constructs in addition to the LMS model of user intention. It would be fascinating to investigate the frameworks of perceived confidence and user satisfaction, for example.

Universiti Utara Malaysia

d) The users' perception of Performance Expectancy, Effort Expectancy, Social Influence, Facilitating Conditions, and Training towards LMS acceptance could change over time. Therefore, the current study's findings should be regarded as preliminary evidence of LMS acceptance determinants. A longitudinal study on these factors might provide a more in-depth understanding of how those factors affect behavioural intention and user acceptance over time;

e) An additional area for future investigation is the impact of moderating effect of location and nature of work (field operation or office);

f) With more and more organisations campaigning on digitalisation and technology adoption in the country, LMS's adoption level has the probability of growing. Hence researchers can examine behavioural intention and actual usage in one study. This research, therefore, recommends future studies using a longitudinal approach to data collection.

6.7 Conclusion

Based on previous studies, an empirical study was conducted to test an updated UTAUT model to investigate LMS acceptance determinants from users' perspective. According to the findings, social influence, facilitating conditions and training can influence users' intention to use LMS. The relationships between the main factors revealed that they are sufficiently linked, establishing a foundation for the basic model of LMS user acceptance. Consequently, based on these findings, the final research model known as the modified UTAUT model is proposed to explain and predict end-user intention in using LMS. A thorough understanding of this model will aid the organisation in determining the reasons for LMS acceptance or rejection among users and improve LMS acceptance and use. According to this report, the updated UTAUT model was successfully used to determine users' intention to use the LMS in Malaysia. The model may be used in other developing countries that are in a similar situation to Malaysia.

Universiti Utara Malaysia

Reference

Abdeleh, A. A., & Sandhu, K. (2010). Factors In The Acceptance Of An Lms In Jordanian Universities. *Asia Pacific Education Review*.

Abel, U., Razep, E., & Grzegorg, M. (2014). A Model of Acceptance of Web 2.0 in learning in higher education: a case study of two cultures. *GSTF International Journal of Chemical Sciences*, *1*(2), 47–68. https://doi.org/10.7603/s40

Abu Bakar, F. M. (2015). *Behavioural intention to adopt point of sales technology in Nigerian retail* [Universiti Utara Malaysia].

https://portal2.uum.edu.my/Facility.aspx

Abubakar, F. M., & Ahmad, H. (2014). Determinants of Behavioural Intention to Use E-Payment System in Nigerian Retail Industry: A Conceptual Extension of UTAUT with Concern for Customers. *International Journal of Contemporary Business Management*, *1*(1), 87–93.

Ackfeldt, A. L., & Coote, L. V. (2005). A study of organizational citizenship behaviors in a retail setting. *Journal of Business Research*, *58*(2 SPEC.ISS.), 151–159. https://doi.org/10.1016/S0148-2963(03)00110-3

Adams, C., Ide, T., Barnett, J., & Detges, A. (2018). Sampling bias in climate-conflict research. *Nature Climate Change*, *8*(3), 200–203. https://doi.org/10.1038/s41558-018-0068-2

Adcock, R., & Collier, D. (2001). Measurement validity: A shared standard for qualitative and quantitative research. *American Political Science Review*, *95*(3), 529–546. https://doi.org/10.1017/S0003055401003100

Universiti Utara Malaysia

Afonso, C. M., Roldán, J. L., Sánchez-Franco, M., & O, M. De. (2012). The moderator role of Gender in the Unified Theory of Acceptance and Use of Technology (UTAUT): A study on users of Electronic Document Management Systems. *7th International Conference on Partial Least Squares and Related Methods*, 1–8.

Ahmad, J. (2018). *TM digital learning system Presentation to IT & NT project review committee (IT&NT)*.

Ajzen, I. (1991). The theory of planned behavior. *Organizational Behavior and Human Decision Processes*, *50*(2), 179–211. https://doi.org/10.1016/0749-5978(91)90020-T

Ajzen, I., & Fishbein, M. (1980). *Understanding Attitudes and Predicting Social Behavior*. Prentice Hall.

http://0-search.ebscohost.com.millenium.itesm.mx/login.aspx

Akbar, F. (2013). What affects students' acceptance and use of technology? *Research Showcase*. http://repository.cmu.edu/hsshonors/179%5Cnfiles/541/179.html

Al-Shafi, S., & Weerakkody, V. (2009). Understanding citizens' behavioural intention in the adoption of e-government services in the state of Qatar. *17th European Conference on Information Systems, ECIS 2009*, *January 2009*.

Al Hakim, L. A. Y. (2012). *Knowledge management implementation,Innovation and organization performance: an empirical study in the Iraqi mobile telecommunications sector* [Universiti Utara Malaysia, Kedah, Malaysia.]. https://portal2.uum.edu.my/Facility.aspx

Al Suwailem, R. (2018). Factors Affecting Faculty's Intent to Use E-Learning Systems

at a University in the Kingdom of Saudi Arabia. *ProQuest Dissertations and Theses*, 102. http://0-search.proquest.com.library.uark.edu/docview/2036470415

Alenezi, A. (2018). Barriers to Participation in Learning Management Systems in Saudi Arabian Universities. *Education Research International*, *2018*, 8. https://doi.org/10.1155/2018/9085914

Algahtani, M. F. (2017). *Factors influencing the adoption of learning management systems in the kingdom of Saudi Arabian universities by female academic staff* (Vol. 2, Issue January) [RMIT University, Melbourne, Australia]. https://researchbank.rmit.edu.au/eserv/rmit:162051/Algahtani.pdf

Alharbi, S., & Drew, S. (2014). Using the Technology Acceptance Model in Understanding Academics' Behavioural Intention to Use Learning Management Systems. *International Journal of Advanced Computer Science and Applications*, *5*(1). https://doi.org/10.14569/ijacsa.2014.050120

Ali, & Bhaskar, S. B. (2016). Basic statistical tools in research and data analysis. *Indian Journal of Anaesthesia*, *60*(9), 662–669. https://doi.org/10.4103/0019-5049.190623

Ali, F., Nair, P. K., & Hussain, K. (2016). An assessment of students' acceptance and usage of computer supported collaborative classrooms in hospitality and tourism schools. *Journal of Hospitality, Leisure, Sport and Tourism Education*, *18*, 51–60. https://doi.org/10.1016/j.jhlste.2016.03.002

Ali, S., Uppal, M. A., & Gulliver, S. R. (2018). A conceptual framework highlighting e-learning implementation barriers. *Information Technology and People*, *31*(1), 156–180. https://doi.org/10.1108/ITP-10-2016-0246

Universiti Utara Malaysia

Aliaño, Á. M., Hueros, A. M. D., Franco, M. D. G., & Aguaded, I. (2019). Mobile learning in university contexts based on the unified theory of acceptance and use of technology (UTAUT). *Journal of New Approaches in Educational Research*, *8*(1), 7–17. https://doi.org/10.7821/naer.2019.1.317

Alias, N. A., & Zainuddin, A. M. (2005). Innovation for Better Teaching and Learning : Adopting the Learning Management System. *Malaysian Online Journal of Instructional Technology*, *2*(2), 27–40.

Almaiah, M. A., Alamri, M. M., & Al-Rahmi, W. (2019). Applying the UTAUT Model to Explain the Students' Acceptance of Mobile Learning System in Higher Education. *IEEE Access*, *7*(December), 174673–174686. https://doi.org/10.1109/ACCESS.2019.2957206

Almaiah, M. A., & Alyoussef, I. Y. (2019). Analysis of the Effect of Course Design, Course Content Support, Course Assessment and Instructor Characteristics on the Actual Use of E-Learning System. *IEEE Access*, *7*, 171907–171922. https://doi.org/10.1109/ACCESS.2019.2956349

Alrawashdeh, T. A., Muhairat, M. I., & Alqatawnah, S. M. (2012). Factors Affecting Acceptance of Web -Based Training System : Using Extended Utaut and Structural Equation Modeling. *International Journal of Computer Science, Engineering and Information Technology (IJCSEIT)*, *2*(2). https://doi.org/DOI:10.5121/ijcseit.2012.2205

Alshehri, A., Rutter, M. J., & Smith, S. (2019). An implementation of the UTAUT model for understanding students' perceptions of Learning Management Systems: A Study within Tertiary Institutions in Saudi Arabia. *International Journal of*

Universiti Utara Malaysia

Distance Education Technologies, *17*(3), 1–24.

https://doi.org/10.4018/IJDET.2019070101

Alshehri, A., Rutter, M. J., & Smith, S. (2020a). The Effects of UTAUT And Usability Qualities on Students' Use of Learning Management Systems in Saudi Tertiary Education. *Journal of Information Technology Education*, *19*(1), 891–930.

Alshehri, A., Rutter, M., & Smith, S. (2020b). The moderating effects of experience and training on students' use of a learning management system. *International Journal of Information and Education Technology*, *10*(9), 685–693. https://doi.org/10.18178/ijiet.2020.10.9.1444

Althobaiti, M. M., & Mayhew, P. (2016). Assessing the usability of learning management system: User experience study. *Lecture Notes of the Institute for Computer Sciences, Social-Informatics and Telecommunications Engineering, LNICST*, *160*, 9–18. https://doi.org/10.1007/978-3-319-28883-3_2

Alvesson, M., & Kärreman, D. (2007). Constructing mystery: Empirical matters in theory development. *Academy of Management Review*, *32*(4), 1265–1281. https://doi.org/10.5465/AMR.2007.26586822

Ameen, N., Willis, R., Abdullah, M. N., & Shah, M. (2019). Towards the successful integration of e-learning systems in higher education in Iraq: A student perspective. *British Journal of Educational Technology*, *50*(3), 1434–1446. https://doi.org/10.1111/bjet.12651

Amer, A.-A., Ahmad, A.-A., & Jo, S. (2013). Exploring Students Acceptance of E-learning Using Technology Acceptance Model in Jordanian Universities. *International Journal of Education and Development Using Information and*

Universiti Utara Malaysia

Communication Technology, *9*(2), 4–18.

http://ijedict.dec.uwi.edu/viewarticle.php?id=1617

Andringa, S., & Godfroid, A. (2020). Sampling Bias and the Problem of Generalizability in Applied Linguistics. *Annual Review of Applied Linguistics*, *40*, 134–142. https://doi.org/10.1017/S0267190520000033

Arif, M., Ameen, K., & Rafiq, M. (2018). Factors affecting student use of Web-based services: Application of UTAUT in the Pakistani context. *Electronic Library*, *36*(3), 518–534. https://doi.org/10.1108/EL-06-2016-0129

Asiri, M. J., Mahmud, R. B., Abu Bakar, K., & Mohd Ayub, A. F. Bin. (2012). Factors influencing the use of learning management system in Saudi Arabian higher education: a theoretical framework. *Higher Education Studies*, *2*(2). https://doi.org/10.5539/hes.v2n2p125

Ayad A Yass. (2018). *An Extended UTAUT Model of Factors Affecting Malaysian Undergraduates' ICT Skills* (Issue November). University Malaya.

Ayaz, A., & Yanartaş, M. (2020). An analysis on the unified theory of acceptance and use of technology theory (UTAUT): Acceptance of electronic document management system (EDMS). *Computers in Human Behavior Reports*, *2*(October), 100032. https://doi.org/10.1016/j.chbr.2020.100032

Aydin, C. C., & Tirkes, G. (2010). Open source learning management systems in e-learning and moodle. *2010 IEEE Education Engineering Conference, EDUCON 2010*, *May*, 593–600. https://doi.org/10.1109/EDUCON.2010.5492522

Baishya, K., & Samalia, H. V. (2020). Extending unified theory of acceptance and use

of technology with perceived monetary value for smartphone adoption at the bottom of the pyramid. *International Journal of Information Management*, *51*(September 2018), 102036. https://doi.org/10.1016/j.ijinfomgt.2019.11.004

Baishya, K., Samalia, H. V., & Joshi, R. (2017). Factors Influencing E-district Adoption : An Empirical Assessment in Indian Context. *International Review of Management and Marketing*, *7*(1), 514–520.

Bakar, M. S. A., & Jalil, D. (2017). Corporate knowledge repository: Adopting academic LMS into corporate environment. *AIP Conference Proceedings*, *1891*. https://doi.org/10.1063/1.5005347

Bakshi, S., & Krishna, S. (2009). Empirical analysis of the impact of virtuality on flexibility of virtual teams in software development projects. *15th Americas Conference on Information Systems 2009, AMCIS 2009*, *8*, 5063–5071.

Barrane, F. Z., Karuranga, G. E., & Poulin, D. (2018). Technology Adoption and Diffusion: A New Application of the UTAUT Model. *International Journal of Innovation and Technology Management*, *15*(6), 1–19

. https://doi.org/10.1142/S0219877019500044

Bellaaj, M., Zekri, I., & Albugami, M. (2015). The continued use of e-learning system: An empirical investigation using UTAUT model at the University of Tabuk. *Journal of Theoretical and Applied Information Technology*, *72*(3), 464–474.

Bernama. (2021). *TM expects transformation programme to pivot sustainable growth trajectory*. *May*.

Binyamin, S. S. (2019). *Using the technology acceptance model to measure the effects*

Universiti Utara Malaysia

of usability attributes and demographic characteristics on student use of learning management systems in Saudi higher education (Issue July). Napier University.

Boothe, E. A. (2017). *A case study of the implementation and adoption of a learning management system (LMS) in a large urban school district* (Issue May) [University of Houston]. http://hdl.handle.net/10657/1850

Bornstein, M. H., Jager, J., & Putnick, D. L. (2013). Sampling in developmental science: Situations, shortcomings, solutions, and standards. *Developmental Review*, *33*(4), 357–370. https://doi.org/10.1016/j.dr.2013.08.003

Buchanan, T., Sainter, P., & Saunders, G. (2013). Factors affecting faculty use of learning technologies: Implications for models of technology adoption. *Journal of Computing in Higher Education*, *25*(1), 1–11. https://doi.org/10.1007/s12528-013-9066-6

Carter, L., & Belanger, F. (2004). Citizen adoption of electronic government initiatives. *Proceedings of the Hawaii International Conference on System Sciences*, *37*(August 2014), 1895–1904. https://doi.org/10.1109/hicss.2004.1265306

Chao, C. M. (2019). Factors determining the behavioral intention to use mobile learning: An application and extension of the UTAUT model. *Frontiers in Psychology*, *10*(JULY), 1–14. https://doi.org/10.3389/fpsyg.2019.01652

Chau, P. Y. K., & Hu, P. J. H. (2001). Information technology acceptance by individual professionals: A model comparison approach. *Decision Sciences*, *32*(4), 699–719. https://doi.org/10.1111/j.1540-5915.2001.tb00978.x

Chaubey, A., & Bhattacharya, D. B. (2015). Learning Management System in Higher Education. *International Journal For Scince Technology And Engineering*, *2*(3),

Universiti Utara Malaysia

158–162.

Chauhan, A., & Amelia, G. (2017). Understanding use of MyIndiHome mobile application through STAUT among users of Indihome service of Telkom Indonesia. *The 9th Indonesia International Conference on Innovation, Entrepreneurship, and Small Business (IICIES 2017)*, *Iicies*.

Chauhan, S., & Jaiswal, M. (2016). Determinants of acceptance of ERP software training in business schools: Empirical investigation using UTAUT model. *International Journal of Management Education*, *14*(3), 248–262. https://doi.org/10.1016/j.ijme.2016.05.005

Chen, C. J., & Huang, J. W. (2007). How organizational climate and structure affect knowledge management-The social interaction perspective. *International Journal of Information Management*, *27*(2), 104–118.

https://doi.org/10.1016/j.ijinfomgt.2006.11.001

Chin, W. W. (2010). Handbook of Partial Least Squares. In *Handbook of Partial Least Squares* (Issue May). https://doi.org/10.1007/978-3-540-32827-8

Ching, J. (2016). *Understanding User ' s Perceived Playfulness toward Mobile Information and Entertainment Services in New Zealand Jacky , Po Ching Chou A thesis submitted to Auckland University of Technology in fulfilment of the degree of Master of Philosophy in*. *January*.

Coakes, S. J., & Steed, L. G. (2003). *SPSS: Analysis without anguish: Version 11.0 for Windows.* (Jaracanda (ed.)). Wiley and Son.

Cohen. (1998). *Statistical Power Analysis for the Bahevioral Science*.

Universiti Utara Malaysia

Coleman, E., & Mtshazi, S. (2017). Factors affecting the use and non-use of Learning Management Systems (LMS) by academic staff. *South African Computer Journal*, *29*(3), 31–63. https://doi.org/10.18489/sacj.v29i3.459

Compeau, D., Higgins, C. A., & Huff, S. (1999). Social cognitive theory and individual reactions to computing technology: A longitudinal study. *MIS Quarterly*, *23*(2), 145–158.

Cooper, D. R., & Schindler, P. S. (2012). *Business research methods* (12th ed.). McGraw Hill.

Creswell. (2009). *Qualitative research in applied linguistic* (J. Heigham & R. Croker (eds.); 1st ed.). Palgrave.

https://vulms.vu.edu.pk/Courses/ENG518/Downloads/[Juanita_Heigham,_Robert_Croker]_Qualitative_Resea(BookFi).pdf#page=152

Creswell. (2019). Research Design : Qualitative,Quantitive and Mixed Methods Approaches. In *Journal of Chemical Information and Modeling* (Vol. 53, Issue 9). https://doi.org/10.1017/CBO9781107415324.004

Dahlstrom, E., Brooks, D. C., & Bichsel, J. (2014). The Current Ecosystem of Learning Management Systems in Higher Education: Student, Faculty, and IT Perspectives. *EDUCAUSE Research Report*, 27. https://doi.org/10.13140/RG.2.1.3751.6005

Dai, B., Larnyo, E., Tetteh, E. A., Aboagye, A. K., & Musah, A. A. I. (2019). Factors Affecting Caregivers' Acceptance of the Use of Wearable Devices by Patients With Dementia: An Extension of the Unified Theory of Acceptance and Use of Technology Model. *American Journal of Alzheimer's Disease and Other Dementias*, *35*. https://doi.org/10.1177/1533317519883493

Darroch, J. (2005). Knowledge management, innovation and firm performance. *Journal of Knowledge Management*, *9*(3), 101–115.

https://doi.org/10.1108/13673270510602809

Daunert, A. L., & Seel, N. M. (2020). Translating and adapting survey instruments: important steps that will define quality and optimize validity of adapted research instruments. *ResearchGate*, *July*.

Davenport, T. (1994). Saving IT's soul: human-centered information management. *Harvard Business Review*, *72*(2), 119–131. https://hbr.org/1994/03/saving-its-soul-human-centered-information-management#

Davis, F. D., Bagozzi, R. P., Warshaw, P. R., Davis F. D. Warshaw P. R., B. R. P., Davis, F. D., Bagozzi, R. P., & Warshaw, P. R. (1989). User Acceptance of Computer Technology: A Comparison of Two Theoretical Models. *Management Science*, *35*(8), 982–1003. https://doi.org/10.1287/mnsc.35.8.982

Davison, A. C., & Diego, K. (2003). An introduction to Network Centrality with applications in R. *Statistical Computing & Statistical Graphics Newsletter*, *13*(1), 6–11. http://www3.nd.edu/~mclark19/projects.html

De_Labriolle. (2020). Literature Review For Mobile Technologies Adoption. *History & Literature Of Christ*, *2014*, 149–160. https://doi.org/10.4324/9780203040720-25

Divan, G., Vajaratkar, V., Desai, M. U., Strik-Lievers, L., Patel, V., Salhia, H. O., Al-nasser, L. A., Taher, L. S., Al-khathaami, A. M., Ross, D. S., Venkatesh, R., Shepard, L., Kagan, S. L., Wurtz, E., Kumar, R., Permanente, K., Watson, J., Jaime, H., Reigeluth, C. M., … Park, G. (2017). Learning Management System

Universiti Utara Malaysia

and the Underlying Learning Theories. *Procedia - Social and Behavioral Sciences*, *2*(1), 1–9. https://doi.org/10.1108/03055720610683013

Drucker, P. (1993). Post Capitalist Society. *Harper Business*, 38.

Dulle, F. W., & Minishi-Majanja, M. K. (2011). The suitability of the unified theory of acceptance and use of technology (utaut) model in open access adoption studies. *Information Development*, *27*(1), 32–45.

https://doi.org/10.1177/0266666910385375

Dwivedi, Y. K., Rana, N. P., Jeyaraj, A., Clement, M., & Williams, M. D. (2019). Re-examining the Unified Theory of Acceptance and Use of Technology (UTAUT): Towards a Revised Theoretical Model. *Information Systems Frontiers*, *21*(3), 719–734. https://doi.org/10.1007/s10796-017-9774-y

Eckhardt, A., Laumer, S., & Weitzel, T. (2009). Who influences whom Analyzing workplace referents' social influence on IT adoption and non-adoption. *Journal of Information Technology*, *24*(1), 11–24. https://doi.org/10.1057/jit.2008.31

Estelle M, P., & Derek S, P. (2005). *How to get a A handbook for students and their supervisors* (4th ed.). Press, Open University.

Faaeq, M. K., Alqasa, K., & Al-Matari, E. M. (2014). Technology adoption and innovation of E-Government in Republic of Iraq. *Asian Social Science*, *11*(3), 135–145. https://doi.org/10.5539/ass.v11n3p135

Farias, J. S., & Resende, M. M. (2021). Impact of Training on The Implementation of A New Electronic System And Acceptance of New Technologies in a Federal Institution of Higher Education. *Revista de Administração Da UFSM*, *13*(4), 773–

791. https://doi.org/10.5902/1983465932624

Fink, A. G. (2013). How to conduct surveys. In *Sage Publication* (5th ed.). http://medcontent.metapress.com/index/A65RM03P4874243N.pdf

Fornell, C., & Cha, J. (1994). Partial Least Squares. *Advanced Methods of Marketing Research*, *407*, 52–78.

Fornell, C., & Larcker, D. F. (1981). SEM with unobservable variables and measurement error: algebra and statistics. In *Journal of Marketing Research* (Vol. 18, Issue 3, pp. 382–388).

Garland, R. (1991). The mid-point on a rating scale: Is it desirable. *Marketing Bulletin*, *2*(1), 66–70.

Garson, G. D. (2016). Partial Least Squares: regression & structural equation models. In *Statistical Associates Publishing*.

Ghazal, S., Aldowah, H., & Umar, I. (2018). Critical factors to learning management system acceptance and satisfaction in a blended learning environment. *Lecture Notes on Data Engineering and Communications Technologies*, *5*(April 2019), 688–698. https://doi.org/10.1007/978-3-319-59427-9_71

Greener, S., & Martelli, J. (2015). *An introduction to business research methods*.

Gwinner, C. (2006). Infosurv White Paper: 5-point vs. 6-point Likert Scales. *Infosurv*, 2.

Hair, Black, W. c., Babin, B. j., & Anderson. (2010). *Multivariate Data Analysis.* (7Th ed.). Prentice Hall.

Hair, J. F., Black, W. C., Babin, B. J., & Anderson, R. E. (2014). Multivariate Data

Universiti Utara Malaysia

Analysis (MVDA). In *Pearson* (7th ed.).

https://doi.org/10.1002/9781118895238.ch8

Hair, J. F., Hult, G. T. M., Ringle, christian M., & Sarsted, M. (2017). *A Primer On PLS_SEM Modelling* (2nd ed.). Sage.

Hair, Money, Page, & Samouel. (2007). Business research method. In *The International Journal of Accounting* (2nd ed.). John Wiley & Sons.

https://doi.org/10.1016/j.intacc.2008.04.006

Harris, M. E. (2016). *Incorporating a training construct into the Unified Theory of Technology Acceptance and Use of Technology.* [Utah State]. http://ovidsp.ovid.com/ovidweb.cgi?T=JS&PAGE=reference&D=psyc14&NEWS=N&AN=2016-53061-019%0Ahttp://gateway.proquest.com/openurl?url_ver=Z39.88-2004&rft_val_fmt=info:ofi/fmt:kev:mtx:dissertation&res_dat=xri:pqm&rft_dat=xri:pqdiss:10108410

Hasan, L. (2019). The usefulness and usability of Moodle LMS as employed by Zarqa University in Jordan. *Journal of Information Systems and Technology Management*, *16*, 1–19. https://doi.org/10.4301/s1807-1775201916009

Hassanzadeh, A., Kanaani, F., & Elahi, S. (2012). A model for measuring e-learning systems success in universities. *Expert Systems with Applications*, *39*(12), 10959–10966. https://doi.org/10.1016/j.eswa.2012.03.028

Hew, T. S., & Syed Abdul Kadir, S. L. (2016). Understanding cloud-based VLE from the SDT and CET perspectives: Development and validation of a measurement

instrument. *Computers and Education*, *101*, 132–149.

https://doi.org/10.1016/j.compedu.2016.06.004

Hisham, Z. (2019). Enabling Digital Malaysia. In *Telekom Malaysia (TM) Integrated Annual Report 2019*.

Ho, L. (2008). What affects organizational performance? *Industrial Management & Data Systems*, *108*(9), 1234–1254. https://doi.org/10.1108/02635570810914919

Hong, J. C., Hwang, M. Y., Hsu, C. H., Tai, K. H., & Kuo, Y. C. (2015). Belief in dangerous virtual communities as a predictor of continuance intention mediated by general and online social anxiety: The Facebook perspective. *Computers in Human Behavior*, *48*(July), 663–670. https://doi.org/10.1016/j.chb.2015.02.019

Hoque, R., & Sorwar, G. (2017). Understanding factors influencing the adoption of mHealth by the elderly: An extension of the UTAUT model. *International Journal of Medical Informatics*, *101*, 75–84.

https://doi.org/10.1016/j.ijmedinf.2017.02.002

Hussein, T., & Khan, S. (2015). *Knowledge Management an instrument for implementation in Retail Marketing*. *III*(I), 1–6.

Hussin, M. (2014). *The Effects of Organizational Factors on Knowledge Effectiveness towards Organizational Performance In Malaysia* [UUM].

http://gradworks.umi.com/35/16/3516765.html

Hustad, E., & Arntzen, A. A. B. (2013). Facilitating Teaching and Learning Capabilities in Social Learning Management Systems: Challenges, Issues, and Implications for Design. *Journal of Integrated Design and Process Science*, *17*(1), 17–35.

Universiti Utara Malaysia

https://doi.org/10.3233/jid-2013-0003

Hwa, S. P., Hwei, O. S., & Peck, W. K. (2016). an Investigation of University Students' Acceptance Towards a Learning Management System Using Technology Acceptance Model. *Journal of Education and Social Sciences*, *5*(2), 1–12. http://jesoc.com/wp-content/uploads/2016/12/KC4_112.pdf

Ifenthaler, D., & Schweinbenz, V. (2016). Students' Acceptance of Tablet PCs in the Classroom. *Journal of Research on Technology in Education*, *48*(4), 306–321. https://doi.org/10.1080/15391523.2016.1215172

Irani, Z., Love, P. E. D., & Jones, S. (2008). Learning lessons from evaluating eGovernment: Reflective case experiences that support transformational government. *Journal of Strategic Information Systems*, *17*(2), 155–164. https://doi.org/10.1016/j.jsis.2007.12.005

Islam, A. K. M. N. (2013). Investigating e-learning system usage outcomes in the university context. *Computers and Education*, *69*, 387–399. https://doi.org/10.1016/j.compedu.2013.07.037

Jafari, M., Rezaeenour, J., Akhavan, P., & Fesharaki, M. N. (2010). Strategic knowledge management in aerospace industries: a case study. *Aircraft Engineering and Aerospace Technology*, *82*(1), 60–74. https://doi.org/10.1108/00022661011028128

Jager, J., Putnik, D., & Marc, B. (2017). More than Just Convenient: The Scientific Merits of Homogeneous Convenience Samples. *HHS Public Access*, *82*(2), 13–30. https://doi.org/10.1111/mono.12296.More

Jiang, X., & Li, Y. (2009). An empirical investigation of knowledge management and

Universiti Utara Malaysia

innovative performance: The case of alliances. *Research Policy*, *38*(2), 358–368. https://doi.org/10.1016/j.respol.2008.11.002

Kabassi, K., Dragonas, I., Ntouzevits, A., Pomonis, T., Papastathopoulos, G., & Vozaitis, Y. (2016). Evaluating a learning management system for blended learning in Greek higher education. *SpringerPlus*, *5*(1), 1–12. https://doi.org/10.1186/s40064-016-1705-8

Karimzadeh, A., Richter, J., Basten, D., Richter, J., & Basten, D. (2017). Acceptance and Use of Interactive Whiteboards in Schools : The Teachers ' Point of View Acceptance and Use of Interactive Whiteboards in Schools : The Teachers ' Point of View. *ICIS 2017 Proceeding*, 0–22.

Kasim, N. N. M., & Khalid, F. (2016). Choosing the right learning management system (LMS) for the higher education institution context: A systematic review. *International Journal of Emerging Technologies in Learning*, *11*(6), 55–61. https://doi.org/10.3991/ijet.v11i06.5644

Keong, M. L., Ramayah, T., Kurnia, S., & Lo, M. C. (2012). Explaining intention to use an enterprise resource planning (ERP) system: an extension of the UTAUT model. *Business Strategy Series*, *13*(4), 173–180. https://doi.org/10.1108/17515631211246249

Khechine, H., Lakhal, S., Pascot, D., & Bytha, A. (2014). UTAUT Model for Blended Learning: The Role of Gender and Age in the Intention to Use Webinars. *Interdisciplinary Journal of E-Skills and Lifelong Learning*, *10*, 033–052. https://doi.org/10.28945/1994

Kim, H., & Gong, Y. (2009). The roles of tacit knowledge and OCB in the relationship

Universiti Utara Malaysia

between group-based pay and firm performance. *Human Resource Management Journal*, *19*(2), 120–139. https://doi.org/10.1111/j.1748-8583.2009.00093.x

Kirkpatrick, J. (2007). The hidden power of kirkpatrick's four levels. In *T and D* (Vol. 61, Issue 8).

Kline. (1998). Software review: Software programs for structural equation modeling: Amos, EQS, and LISREL. *Journal of Psychoeducational Assessment*, *16*, 343–364. https://journals.sagepub.com/doi/pdf/10.1177/073428299801600407

Koenig, M. E. D. (2012). What is KM? Knowledge Management Explained. *KMWorld*, 9. http://www.kmworld.com/Articles/Editorial/What-Is-.../What-is-KM-Knowledge-Management-Explained-82405.aspx

Krejcie, R. V, & Morgan, D. W. (1970). Determining Sample Size for Research Activities Robert. *Educational and Psychological Measurement*, *38*(1), 607–610. https://doi.org/10.1177/001316447003000308

Kridan, A. B., & Goulding, J. S. (2006). A case study on knowledge management implementation in the banking sector. *Vine*, *36*(2), 211–222. https://doi.org/10.1108/03055720610683013

Kumpikaite, V., & Ramune, Č. (2010). New training technologies and their use in training and development activities : Survey evidence from Lithuania. *Journal of Business Economics and Management*, *2010*, 37–41. https://doi.org/10.3846/1611-1699.2008.9.155

Lakhal, S., & Khechine, H. (2016). Student intention to use desktop web-conferencing according to course delivery modes in higher education. *International Journal of Management Education*, *14*(2), 146–160.

Universiti Utara Malaysia

https://doi.org/10.1016/j.ijme.2016.04.001

Lee, S., Hong, J. Y., & Suh, E. (2016). Measuring the change in knowledge sharing efficiency of virtual communities of practice: a case study. *International Journal of Technology Management*, *70*(1), 58. https://doi.org/10.1504/IJTM.2016.074675

Li, Y., & Zhao, M. (2021). A Study on the Influencing Factors of Continued Intention to Use MOOCs: UTAUT Model and CCC Moderating Effect. *Frontiers in Psychology*, *12*(August), 1–13. https://doi.org/10.3389/fpsyg.2021.528259

Liao, S.-H., & Wu, C. (2010). System perspective of knowledge management, organizational learning, and organizational innovation. *Expert Systems with Applications*, *37*(2), 1096–1103. https://doi.org/10.1016/j.eswa.2009.06.109

Liebenberg, J., Benade, T., & Ellis, S. (2018). Acceptance of ICT: Applicability of the Unified Theory of Acceptance and Use of Technology (UTAUT) to South African Students. *The African Journal of Information Systems*, *10*(3), 1.

Ma, Q., Chan, A. H. S., & Chen, K. (2016). Personal and other factors affecting acceptance of smartphone technology by older Chinese adults. *Applied Ergonomics*, *54*, 62–71. https://doi.org/10.1016/j.apergo.2015.11.015

Machado, M., & Tao, E. (2007). Blackboard vs. Moodle: Comparing user experience of learning management systems. *Proceedings - Frontiers in Education Conference, FIE*, *December 2006*, 7–12.

https://doi.org/10.1109/FIE.2007.4417910

Malaysian Communications and Multimedia, M. (2020). *Industry Performance Report*.

Universiti Utara Malaysia

Marchewka, J. T., & Kostiwa, K. (2007). An Application of the UTAUT Model for Understanding Student Perceptions Using Course Management Software. *Communications of the IIMA*, *7*(2), 93–104. http://scholar.google.com/scholar =intitle:An+Application+of+the+UTAUT+Model

Mariz, C., Stephenson, J. S., & Carter, M. C. (2017). Interactive whiteboards in education : A literature scoping survey. *Australian Educational Computing*, *32*(1).

Marler, J. H., Liang, X., & Dulebohn, J. H. (2006). Training and effective employee information technology use. *Journal of Management*, *32*(5), 721–743. https://doi.org/10.1177/0149206306292388

Marshall, Mills, R., & Olsen, D. (2008). The Role Of End-User Training In Technology Acceptance. *Review of Business Information Systems (RBIS)*, *12*(2), 1–8. https://doi.org/10.19030/rbis.v12i2.4384

Martín-Blas, T., & Serrano-Fernández, A. (2009). The role of new technologies in the learning process: Moodle as a teaching tool in Physics. *Computers and Education*, *52*(1), 35–44. https://doi.org/10.1016/j.compedu.2008.06.005

Martins, C., Oliveira, T. and Popovič, A. (2014). Understanding the Internet banking adoption: A unified theory of acceptance and use of technology and perceived risk application. *International Journal of Information Management*, *34*(1), 1–13.

Masud, A., & Huang, X. (2012). Elearning Cloud As Lms. *World Academy of Science, Engineering and Technology*, *62*, 74–78.

Mathieson. (1991). Comparing The Technology Acceptance Model with The Theory of Planned Behaviour. *Information Systems Research*, *2*, *3*(3), 173–191.

Universiti Utara Malaysia

Milhem, W., Abushamsieh, K., & Pérez Aróstegui, M. (2014). Training strategies, theories and types. *Journal of Accounting, Business & Management*, *21*(1), 12–26.

Mishra, Sh. B., & Alok, S. (2017). Handbook of Research Methodology. In *Educreattion* (1st ed.). https://doi.org/10.1097/00003465-199001000-00018

Mohamed, H. (2016). Telekom Malaysia sets off on a digital transformation journey. *TM Forum*.

Momani, A. M., Jamous, M. M., & Hilles, S. M. S. (2017). Technology acceptance theories: Review and classification. *International Journal of Cyber Behavior, Psychology and Learning*, *7*(2), 1–14.

https://doi.org/10.4018/IJCBPL.2017040101

Moore, J. L., Dickson-Deane, C., & Galyen, K. (2011). E-Learning, online learning, and distance learning environments: Are they the same? *Internet and Higher Education*, *14*(2), 129–135. https://doi.org/10.1016/j.iheduc.2010.10.001

Morgan, D. L. (2015). From themes to hypotheses: Following up with quantitative methods. *Qualitative Health Research*, *25*(6), 789–793. https://doi.org/10.1177/1049732315580110

Moshari, J. (2013). Knowledge Management Issues in Malaysian Organizations: the Perceptions of Leaders. *Journal of Knowledge Management, Economics and Information Technology*. https://doi.org/10.1016/B978-0-7506-3699-5.50013-3

Muchnik, L., Aral, S., & Taylor, S. J. (2013). Social influence bias: A randomized experiment. *Science*, *341*(6146), 647–651.

https://doi.org/10.1126/science.1240466

Mukred, A., Singh, D., & Mohd Satar, N. S. (2020). Examining The Influence of Perceived Need on The Adoption of Information System in Public Hospitals in Yemen. *Asia-Pacific Journal of Information Technology and Multimedia*, *9*(2), 35–49. https://doi.org/10.17576/apjitm-2020-0902-04

Mustafa, H. K., & Yaakub, S. (2018). Innovation and Technology Adoption Challanges: Impact on SMEs' Company Performance. *International Journal of Accounting, Finance and Business*, *3*(15), 57–65. www.ijafb.com

Nafsaniath, F., Shannon, D., & Ross, M. (2015). Expanding The Technology Acceptance Model (TAM) to Examine Faculty Use of Learning Management Systems (LMSs) In Higher Education Institutions. *MERLOT Journal of Online Learning and Teaching*, *11*(2), 210–232. https://doi.org/10.12720/joams.4.2.92-97

Nakano, Y., Tsusaka, T. W., Aida, T., & Pede, V. O. (2015). The Impact of Training on Technology Adoption and Productivity of Rice Farming in Tanzania: Is Farmer-to-Farmer Extension Effective? An Empirical Analysis of Expanding Rice Production in Sub-Sahara Africa. *JICA-RI Working Paper. No. 90*, *90*.

Nor, N. M., & Nor, N. J. (2008). The influence of structural capital and knowledge management on the performance : the case study of Telekom Malaysia headquarters. *Knowledge Management International Conference*, 634–640.

Nyandoro, C. K. (2016). *Factors influencing information communication technology (ICT) acceptance and use in small and medium enterprises (SMEs) in Kenya (Order No. 10024096)* (Issue January) [Capella University].

Universiti Utara Malaysia

https://lopes.idm.oclc.org/login?url=http://search.proquest.com/docview/1769012171?accountid=7374

Oliveira, T., Thomas, M., Baptista, G., & Campos, F. (2016). Mobile payment: Understanding the determinants of customer adoption and intention to recommend the technology. *Computers in Human Behavior*, *61*(2016), 404–414. https://doi.org/10.1016/j.chb.2016.03.030

Oumlil, R., Bennani, A., & Abdelmonaim, A. (2013). Acceptance of e-entrepreneurship: case of Morocco acceptance of e-entrepreneurship. *Researhgate*, *June*.

Pallant, J. (2011). SPSS Survival Manual: A step by step guide to data analysis using SPSS. In *Allen & Unwin* (4th ed.).

Panzeri, S., Magri, C., & Carraro, L. (2008). Sampling bias. *Scholarpedia*, *3*(9), 4258. https://doi.org/10.4249/scholarpedia.4258

Pickard, G., Pan, W., Rahwan, I., Cebrian, M., Crane, R., Madan, A., & Pentland, A. (2011). Time-critical social mobilization. *Science*, *334*(6055), 509–512. https://doi.org/10.1126/science.1205869

Polonski, V. (2015). Can we use social influence to drive change for good ? *World Economic Forum*, *August*, 1–8. https://www.weforum.org/agenda/2015/08/can-we-use-social-influence-to-drive-change-for-good/

Qureshi, I., Ilyas, K., Yasmin, R., & Whitty, M. (2012). Challenges of implementing e-learning in a Pakistani university. *Knowledge Management and E-Learning*, *4*, 310–324.

Universiti Utara Malaysia

Radif, M. (2018). *A Learning Management System Adoption Framework for Higher Education : The Case of Iraq* (Issue October 2016).

Radovan, M., & Kristl, N. (2017). Acceptance of technology and its impact on teacher's activities in virtual classroom: Integrating UTAUT and CoI into a combined model. *Turkish Online Journal of Educational Technology*, *16*(3), 11–22.

Rahmaningtyas, W., Mulyono, K. B., Widhiastuti, R., Fidhyallah, N, F., & Faslah, R. (2020). Application of UTAUT (Unified Theory of Acceptance and Use of Technology) to Understand the Acceptance and Use of the E-Learning System. *International Journal of Advanced Science and Technology*, *29*(4), 5051–5060. https://www.researchgate.net/profile/Ratieh_Widhiastuti/publication/343546300

Raman, A., Don, Y., & Daud, Y. (2015). Usage of edublogs among malaysian secondary school students. *Mediterranean Journal of Social Sciences*, *6*(5), 500–506. https://doi.org/10.5901/mjss.2015.v6n5p500

Raman, A., Don, Y., Khalid, R., & Rizuan, M. (2014). Usage of learning management system (Moodle) among postgraduate students: UTAUT model. *Asian Social Science*, *10*(14), 186–192. https://doi.org/10.5539/ass.v10n14p186

Ramin, N., Taib, K., Hashim, D., Noordin, S. A., & Yasin, S. M. (2013). Knowledge Management Implementation in a Government Research Institute in Selangor, Malaysia. *Communications of the IBIMA*, *2013*, 1–12. https://doi.org/10.5171/2013.476066

Ramírez-correa, P. E., Arenas-gaitán, J., & Rondán-catalu, F. J. (2015). Gender and Acceptance of E-Learning : A Multi-Group Analysis Based on a Structural Equation Model among College Students in. *PLOS One*, *2*, 1–17.

Universiti Utara Malaysia

https://doi.org/10.1371/journal.pone.0140460

Ranjit, K. (2019). Research Methodology: A Step-by-Step Guide for Beginners - Ranjit Kumar - Google Books. In *Sage* (pp. 1–755).

https://books.google.co.uk/books/about/Research_Methodology.html?id=MKGVAgAAQBAJ&redir_esc=y

Rhodes, J., Hung, R., Lok, P., Ya-Hui Lien, B., & Wu, C. (2008). Factors influencing organizational knowledge transfer: implication for corporate performance. *Journal of Knowledge Management*, *12*(3), 84–100.

https://doi.org/10.1108/13673270810875886

Rogers, E. M. (1995). Diffusion of innovations. In *Macmillian Publishing Co.* https://doi.org/citeulike-article-id:126680

Sam, H. K., Othman, A. E. A., & Nordin, Z. S. (2005). Computer self-efficacy, computer anxiety, and attitudes toward the Internet: A study among undergraduates in Unimas. *Educational Technology and Society*, *8*(4), 205–219. https://doi.org/10.2307/jeductechsoci.8.4.205

Sani Abdullahi, M., Lawan Gwadabe, Z., Bature Ibrahim, A., & Author, C. (2018). Effect of Training and Development on Employees Productivity Among Academic Staff of Kano State Polytechnic, Nigeria. *Asian People Journal (APJ)*, *1*(2), 264–286.

www.journal.unisza.edu.my/apj/www.journal.unisza.edu.my/apj/264%7C

Saunders, M. N. K., Lewis, P., & Thornhill, A. (2019). "Research Methods for Business Students" Chapter 4: Understanding research philosophy and approaches to theory

Universiti Utara Malaysia

development. In *Researchgate.Net* (Issue January). www.pearson.com/uk

Sekaran, U. (2003). *Research methods for business: A skill building approach . 605 John Wiley & Sons Inc* (4th ed.). John Wiley & Sons.

Sekaran, U. (2013). Research methods for business. In J. Marshall (Ed.), *Research methods for business* (Vol. 65, Issue 3). John Wiley & Sons. https://doi.org/10.1017/CBO9781107415324.004

Sekaran, U., & Bougie, R. (2009). *Research Methods for Business: A Skill-Building Approach.* (5th ed.). John Wiley and Sons Inc.

Sheppard, B. H., Hartwick, J., & Warshaw, P. R. (1988). The theory of reasoned action: A meta-analysis of past research with recommendations for modifications and future research. *Journal of Consumer Research*, *15*(3), 325. https://doi.org/10.1086/209170

Shih, Y. Y., & Fang, K. (2004). The use of a decomposed theory of planned behavior to study Internet banking in Taiwan. *Internet Research*, *14*(3), 213–223. https://doi.org/10.1108/10662240410542643

Showkat, N., & Parveen, H. (2017). *Non-Probability and Probability Sampling* (Issue July). Quadrant-I (e-Text) Module.

Shringarpure, S., & Xing, E. P. (2014). Effects of sample selection bias on the accuracy of population structure and ancestry inference. *G3: Genes, Genomes, Genetics*, *4*(5), 901–911. https://doi.org/10.1534/g3.113.007633

Shuhaiber, A. (2016). How Facilitating Conditions Impact S tudents ' Intention to Use Virtual Lectures ? An Empirical Evidence. *AICT 2016 : The Twelfth Advanced*

International Conference on Telecommunications, *c*, 68–75.

Singh, R. K. (2017). Impact of Training on Ti-Ie Adoption of Technology. *J. Interacad.*, *April 2017*, 2–4.

Slade, E., Williams, M., Dwivedi, Y., & Piercy, N. (2015). Exploring consumer adoption of proximity mobile payments. *Journal of Strategic Marketing*, *23*(3), 209–223. https://doi.org/10.1080/0965254X.2014.914075

Snoussi, T. (2019). Learning Management System in Education: Opportunities and Challenges. *International Journal of Innovative Technology and Exploring Engineering*, *8*(12S), 664–667. https://doi.org/10.35940/ijitee.l1161.10812s19

Suha, A., & Anne, M. (2008). The use of UTAUT Model in the Adoption of E-government Services in Kuvait. *Proceedings of the 41st Havaii International Conference on System Sciences*, 1–11.

Suki, N. M., & Suki, N. M. (2017). Determining students' behavioural intention to use animation and storytelling applying the UTAUT model: The moderating roles of gender and experience level. *International Journal of Management Education*, *15*(3), 528–538. https://doi.org/10.1016/j.ijme.2017.10.002

Šumak, B., & Šorgo, A. (2016). The acceptance and use of interactive whiteboards among teachers: Differences in UTAUT determinants between pre- and post-adopters. *Computers in Human Behavior*, *64*, 602–620.

https://doi.org/10.1016/j.chb.2016.07.037

Swart, A. J. (2016). The effective use of a learning management system still promotes student engagement! *IEEE Global Engineering Education Conference, EDUCON*,

10-13-Apri(April), 40–44. https://doi.org/10.1109/EDUCON.2016.7474528

Tabachnick, B. G., & Fidell, L. S. (1996). *Using multivariate statistics (3rd ed.). New York: Harper Collins.* (3rd ed.). Harper Collins.

Taherdoost, H. (2018). Validity and Reliability of the Research Instrument; How to Test the Validation of a Questionnaire/Survey in a Research. *SSRN Electronic Journal*, *January 2016*. https://doi.org/10.2139/ssrn.3205040

Taylor, S., & Todd, P. (1995a). Assessing IT Usage: The Role of Prior Experience. *MIS Quarterly*, *19*(4), 561. https://doi.org/10.2307/249633

Taylor, S., & Todd, P. A. (1995b). Understanding information technology usage: A test of competing models. In *Information Systems Research* (Vol. 6, Issue 2, pp. 144–176). https://doi.org/10.1287/isre.6.2.144

Telekom, M. (2020). *Telekom Malaysia Berhad Integrated Annual Report 2020*. https://www.tm.com.my/annualreport/images/pdf/TM-IAR2020-ENG.pdf

Telekom Malaysia. (2014). *Sustainability Report 2014*. www.tm.com.my

Tey, T. C. Y., & Moses, P. (2018). UTAUT: Integrating Achievement Goals and Learning Styles for Undergraduates' Behavioural Intention to Use Technology. *EAI Endorsed Transactions on E-Learning*, *5*(17), 155573.

https://doi.org/10.4108/eai.25-9-2018.155573

Thongsri, N., Shen, L., & Bao, Y. (2020). Investigating academic major differences in perception of computer self-efficacy and intention toward e-learning adoption in China. *Innovations in Education and Teaching International*, *57*(5), 577–589. https://doi.org/10.1080/14703297.2019.1585904

TM Annual Report. (2016). Convergence. *Tm Annual Report*, *43*(3), 1301–1305.

Uddin, M. A., Alam, M. S., Mamun, A. Al, Khan, T. U. Z., & Akter, A. (2019). A study of the adoption and implementation of enterprise resource planning (ERP): Identification of moderators and mediator. *Journal of Open Innovation: Technology, Market, and Complexity*, *6*(1).

https://doi.org/10.3390/JOITMC6010002

United Nations. (2015). The Millennium Development Goals Report. *United Nations*, 72. https://doi.org/978-92-1-101320-7

Uziak, J., Oladiran, M. T., Lorencowicz, E., & Becker, K. (2018). Students' and instructor's perspective on the use of blackboard platform for delivering an engineering course. *Electronic Journal of E-Learning*, *16*(1), 1–15.

Van Dijk, J. A. G. M., Peters, O., & Ebbers, W. (2008). Explaining the acceptance and use of government Internet services: A multivariate analysis of 2006 survey data in the Netherlands. *Government Information Quarterly*, *25*(3), 379–399. https://doi.org/10.1016/j.giq.2007.09.006

Vannoy, S., & Palvia, P. (2010). The Social Influence Model of Technology Adoption. *Communications of the ACM*, *53*, 149–153.

Vatanasombut, B., Igbaria, M., Stylianou, A. C., & Rodgers, W. (2008). Information systems continuance intention of web-based applications customers: The case of online banking. *Information and Management*, *45*(7), 419–428. https://doi.org/10.1016/j.im.2008.03.005

Venkatesh, Morris, Gordon, D. (2003). *User Acceptance Technology : Toward a*

Unified View User Acceptance of Information. 1–5.

Venkatesh, Morris, M. G., Davis, G. B., & Davis, F. D. (2003). User acceptance of information technology: toward a unified view. *Source: MIS Quarterly*, *27*(3), 425–478. https://doi.org/10.2307/30036540

Venkatesh, Thong, J. Y. L., Chan, F. K. Y., Hu, P. J. H., & Brown, S. A. (2011). Extending the two-stage information systems continuance model: Incorporating UTAUT predictors and the role of context. *Information Systems Journal*, *21*(6), 527–555. https://doi.org/10.1111/j.1365-2575.2011.00373.x

Venkatesh, V., Thong, J., & X. Xu. (2012). Consumer Acceptance and Use of Information Technology: Extending the Unified Theory of Acceptance and Use of Technology. *MIS Quarterly*, *36*(1), 157–178. https://doi.org/10.1111/j.1540-4560.1981.tb02627.x

Venkatesh, Viswanath, & Davis, F. D. (2000). Theoretical extension of the Technology Acceptance Model: Four longitudinal field studies. *Management Science*, *46*(2), 186–204. https://doi.org/10.1287/mnsc.46.2.186.11926

Vogels, E. (2019). Millennials stand out for their technology use, but older generations also embrace digital life. *Pew Research Center*, *September 2019*, 1–11.

Walliman, N. (2018). Research Methods, The Basics. In *Communication Booknotes* (Vol. 2, Issue 8). Routledge. https://doi.org/10.1080/10948007109489547

Wang, S. (2018). *Factors Impacting the Uptake of Mobile Banking in China: Integrating UTAUT, TTF and ECM Models*. University of Manchester.

Wang, & Shih. (2009). Why do people use information kiosks? A validation of the

Universiti Utara Malaysia

Unified Theory of Acceptance and Use of Technology. *Government Information Quarterly*, *26*(1), 158–165. https://doi.org/10.1016/j.giq.2008.07.001

Whetten, D. A. (2009). An examination of the interface between context and theory applied to the study of chinese organizations. *Management and Organization Review*, *5*(1), 29–55. https://doi.org/10.1111/j.1740-8784.2008.00132.x

Wiig, K. M. (1997). Knowledge Management: An Introduction and Perspective. *Journal of Knowledge Management*, *1*(1), 6–14.

https://doi.org/10.1108/13673279710800682

Williams, M. D., Rana, N. P., & Dwivedi, Y. K. (2015). The unified theory of acceptance and use of technology (UTAUT): A literature review. In *Journal of Enterprise Information Management* (Vol. 28, Issue 3).

https://doi.org/10.1108/JEIM-09-2014-0088

Wu, ying wu, Yu, pei yuan, & Weng, yung chien. (2013). A Study on User Behavior for I Pass by UTAUT: Using Taiwan's MRT as an Example. *Research in Autism Spectrum Disorders*, *7*(12), 1551–1557.

https://doi.org/10.1016/j.rasd.2013.09.002

Yamin, M., & Lee, Y. (2010). Level of acceptance and factors influencing students' intention to use UCSI University's e-mail system. *Proceedings - 2010 International Conference on User Science and Engineering, i-USEr 2010*, *December 2016*, 26–31. https://doi.org/10.1109/IUSER.2010.5716717

Zadeh, S. B., Ayub, A. F. M., Mahmud, R., & Daud, S. M. (2017). The influence of system interactivity and technical support on learning management system

Universiti Utara Malaysia

utilization. *Knowledge Management and E-Learning*, *9*(1), 50–68.

Zainal, A. Z., & Zainuddin, S. Z. (2020). Technology adoption in Malaysian schools: An analysis of national ICT in education policy initiatives. *Digital Education Review*, *37*, 172–194. https://doi.org/10.1344/DER.2020.37.172-194

Zawawi, S. N. H., Jusoff, K., Rahman, R. A., & Idris, K. M. (2009). Behavioural Intention for Fraudulent Reporting Behaviour Using Cognitive Theory. *Asian Social Science*, *4*(7). https://doi.org/10.5539/ass.v4n7p43

Zikmund. (2012). Basic and Applied Research. In *Business Research Methods* (p. 7). https://doi.org/10.1093/embo-reports/kvf016

Zikmund, W., Babin, B., Carr, J., & Griffin, M. (2013). Business Research Methods 8e. In *Cengage Learning* (8th ed.).

Zoubi, A., & Issa, A. (2017). Investigating the Extent of Learning Management System Adoption in a Jordanian Higher Education Institution. *International Journal of Business and Social Science*, *8*(3), 1–9.

Universiti Utara Malaysia

Appendix A: Questionaire

OTHMAN YEOP ABDULLAH (OYA),
GRADUATE SCHOOL OF BUSINESS.

Tuan/Puan,

Saya Meor Ahmad Shahruzzaman B. Meor Hashim, pelajar Sarjana Kedoktoran Pengurusan Perniagaan (DBA) dari Universiti Utara Malaysia, sedang menjalankan kajian yang bertajuk "Rangka Kerja Implementasi Untuk Meningkatkan Tahap Penggunaan Sistem Pengurusan Pembelajaran (LMS) Dikalangan Anggota-Anggota Telekom Malaysia".

Mohon berikan kerjasama dengan menjawab kesemua soalan yang dikemukakan secara ikhlas kerana setiap jawapan yang diberikan tidak ada yang betul atau salah. Setiap maklumbalas anda akan dilindungi kerahsiaannya dan hanya digunakan untuk tujuan akademik semata-mata.

Terima kasih diatas kerjasama anda.

Dear Sir/Madam

I am Meor Ahmad Shahruzzaman B. Meor Hashim, a Doctor of Business Administration (DBA) student from Universiti Utara Malaysia, currently conducting a research entitled "Implementation Framework To Enhance The Adoption Level Of The Learning Management System (LMS) Among Employees Of Telekom Malaysia".

Kindly cooperate by answering all the question honestly as there is no right or wrong answer to the question. Be assured that your responses will be treated with the utmost confidentiality and used purely for academic purposes.

Thanks for your cooperation.

Meor Ahmad Shahruzzaman B. Meor Hashim
Othman Yeob Abdullah Graduate School
University Utara Malaysia
H/P: 013-3602628 (Email: meorahmad@gmail.com)

PENGENALAN KEPADA SISTEM PENGURUSAN PEMBELAJARAN (LMS)
"Sistem Pengurusan Pembelajaran (LMS)" adalah suatu aplikasi untuk pengurusan, dokumentasi, menjejaki, melaporkan dan menjalankan kursus dan program latihan. LMS memberikan tumpuan kepada pembelajaran secara atas talian tetapi ianya juga menyokong beberapa penggunaan lain termasuk kursus atas talian secara penuh mahupun kursus yang dicampurkan secara atas talian dan kelas biasa. Secara umumnya, bahan-bahan pembelajaran akan dimuat naik kepada LMS yang menjadikannya mudah untuk di akses oleh pengguna. Dengan LMS, semua orang yang mempunyai kata laluan yang sah boleh mengakses maklumat yang diperlukan dimana-mana dan bila-bila masa sahaja.
INTRODUCTION TO THE LEARNING MANAGEMENT SYSTEM (LMS)
Learning Management System (LMS) is a software application for the administration, documentation, tracking, reporting and delivery of educational courses or training programs. LMSs are focused on online learning delivery but support a range of uses, acting as a platform for fully online courses and several hybrid forms, such as blended learning. Typically, learning material is uploaded to the Learning Management System, making them easily accessible for remote learners. LMS is a vast repository where you can store and track information. Anyone with a login and password can access these online training resources whenever and wherever.

UUM Universiti Utara Malaysia

BAHAGIAN 1: MAKLUMAT AM

Bahagian ini mengandungi soalan umum berkaitan diri anda. Sila tandakan (√) pada kotak yang bersesuaian dengan jawapan anda.

SECTION 1: GENERAL INFORMATION

This section asks general questions about you. Please tick (√) the relevant box that corresponds to your chosen answer or fill in the gap.

1. Jantina /*(Gender)*	☐	Lelaki *(Male)*
	☐	Wanita *(Female)*

2. Di wilayah manakah anda bertugas?/ *(Which region are you currently working in?)*	
Kawasan Tengah / *(Central Region)*	☐
Kawasan Utara / *(Northern Region)*	☐
Kawasan Timur /(Eastern Region)	☐
Kawasan Selatan / (Southern Region)	☐
Kawasan Timur / (Sabah Region)	☐
Kawasan Timur /(Sarawak Region)	☐

3. Apakah kumpulan umur anda? / (What age group do you belong to?)			
20-30 tahun *(20-30 years)*	☐	41-50 tahun *(41-50 years)*	☐
31-40 tahun *(31-40 years)*	☐	51-60 tahun *(51-60 years)*	☐

4. Berapa lamakah anda sudah bertugas di TM?/ *(What is the category of your current job?)*			
Kurang dari 5 tahun/below 5 year	☐	5 – 10 tahun / years	☐
11-20 Tahun/years	☐	21-30 tahun / yeras	☐
Lebih dari 30 tahun / more than 30 years	☐		

5. Apakah tahap pendidikan semasa anda? / (What is your current level of education?)			
Sijil / Diploma atau lebih rendah/ *(Certificate/Diplomaor lower)*	☐	Sarjana Muda / *(Bachelor Degree)*	☐
Sarjana *(Master's Degree)*	☐	Ijazah Kedoktoran *(Doctorate Degree)*	☐

UUM Universiti Utara Malaysia

B2 SOALAN BERKAITAN IV

BAHAGIAN 2: Bahagian ini bertujuan untuk menjelaskan tentang jangkaan prestasi (PE), jangkaan usaha (EE), pengaruh sosial (SI), persekitaran yang memudahkan (FC) hasrat gelagat pengguna (UBI)dan kebimbangan terhadap penggunaan komputer (AX) diatas penggunaan 'Sistem Pengurusan Pembelajaran' (LMS). Sila nyatakan sejauh mana anda bersetuju dengan penyataan berikut berdasarkan skala Likert antara 1= sangat tidak bersetuju dan 5= sangat bersetuju.

***SECTION 4**: Describes Performance Expectancy (PE), Effort Expectancy (EE), Social Influence (SI), Facilitating Conditions User Behavioral Intention (UBI), Computer Anxiety towards 'The Usage of The Learning Management System' (LMS).Please, indicate the extent to which you disagree or agree with the statement based on 5-points Likert scale ranges from 1=strongly disagree (SD) to 5=strongly agree (SA).*

*SD = Strongly Disagree / SA = Strongly Agree

Jangkaan Prestasi (PE) ***Performance Expectancy (PE)***			SD				SA
1	PE-1	Saya percaya penggunaan 'Sistem Pengurusan Pembelajaran' (LMS) dapat meningkatkan prestasi kerja saya. *(I believe using LMS enhances my work performance).*	1	2	3	4	5
2	PE-2	Saya percaya penggunaan 'Sistem Pengurusan Pembelajaran' (LMS) dapat membantu dalam mencapai maklumat dengan lebih cepat. *(I believe using LMS helps to get information more quickly).*	1	2	3	4	5
3	PE-3	Saya percaya penggunaan 'Sistem Pengurusan Pembelajaran' (LMS) dapat memudahkan peningkatan pengetahuan akademik saya. *(I believe using LMS facilitates my academic efficiency).*	1	2	3	4	5
4	PE-4	Saya percaya penggunaan 'Sistem Pengurusan Pembelajaran' (LMS) lebih memudahkan saya untuk melakukan kerja. *(I believe using LMS would make it easier to do my work).*	1	2	3	4	5
5	PE-5	Saya percaya kekerapan menggunakan 'Sistem Pengurusan Pembelajaran' (LMS) menjadikan saya lebih cekap dalam kerja saya. *(I believe frequent use of LMS would earn me competency in my work).*	1	2	3	4	5

UUM Universiti Utara Malaysia

*SD = Strongly Disagree / SA = Strongly Agree

Jangkaan Usaha (EE) **Effort Expectancy (EE)**			SD				SA
6	EE-1	Saya percaya interaksi penggunaan 'Sistem Pengurusan Pembelajaran' (LMS) adalah jelas dan difahami. *(I believe interaction with the LMS interface would be clear and understandable).*	1	2	3	4	5
7	EE-2	Saya percaya adalah mudah bagi saya memahirkan diri untuk menggunakan 'Sistem Pengurusan Pembelajaran' (LMS). *(I believe It will be easy for me to become skillful at using the LMS).*	1	2	3	4	5
8	EE-3	Saya percaya 'Sistem Pengurusan Pembelajaran' (LMS) senang digunakan. *(I believe the LMS is easy to use).*	1	2	3	4	5
9	EE-4	Saya percaya penggunaan 'Sistem Pengurusan Pembelajaran' (LMS) adalah lebih fleksibel. *(I believe the use of LMS is more flexible).*	1	2	3	4	5

Pengaruh Sosial (SI) ***Social Influence (SI)***			SD				SA
10	SI-1	Saya percaya mereka yang berpengaruh di organisasi saya merasakan yang saya patut menggunakan 'Sistem Pengurusan Pembelajaran' (LMS). *(I believe important people in my organization think I should use the LMS).*	1	2	3	4	5
11	SI-2	Saya percaya mereka yang penting di dalam unit saya mahukan saya menggunakan 'Sistem Pengurusan Pembelajaran' (LMS). *(I believe people who are important in my unit would want me to use LMS).*	1	2	3	4	5
12	SI-3	Saya percaya mereka yang menggunakan 'Sistem Pengurusan Pembelajaran' (LMS) di organisasi saya adalah lebih berpengaruh. *(I believe people that use the LMS in my organization are more influential).*	1	2	3	4	5
13	SI-4	Saya percaya saya akan menggunakan 'Sistem Pengurusan Pembelajaran' (LMS) sekiranya rakan saya menggunakannya. *(I believe I would use the LMS if my friends use it).*	1	2	3	4	5
14	SI-5	Saya percaya organisasi saya menyokong penggunaan 'Sistem Pengurusan Pembelajaran' (LMS). *(I believe my organization supported the use of LMS).*	1	2	3	4	5

Universiti Utara Malaysia

*SD = Strongly Disagree / SA = Strongly Agree

Persekitaran Yang Memudahkan (FC) ***Facilitating Conditions (FC)***			SD				SA
15	FC-1	Saya percaya saya mempunyai sumber yang sesuai untuk menggunakan 'Sistem Pengurusan Pembelajaran' (LMS) di organisasi saya. *(I believe I have the resources to use the LMS in my organization)*	1	2	3	4	5
16	FC-2	Saya percaya saya mempunyai pengetahuan untuk menggunakan 'Sistem Pengurusan Pembelajaran' (LMS). *(I believe I have the knowledge to use the LMS).*	1	2	3	4	5
17	FC-3	Saya percaya ia akan menjadi lebih mudah kepada saya untuk menggunakan 'Sistem Pengurusan Pembelajaran' (LMS) sekiranya terdapat arahan tertentu. *(I believe, given the specific instruction, it would be easier for me to use the LMS).*	1	2	3	4	5
18	FC-4	Saya percaya terdapat anggota pengurusan untuk membantu sekiranya terdapat masalah penggunaan 'Sistem Pengurusan Pembelajaran' (LMS) di dalam organisasi saya. *(I believe an admin personnel is available to support in case of difficulty in using the LMS in my organization).*	1	2	3	4	5
19	FC-5	Saya percaya terdapat kemudahan ICT yang secukupnya di unit saya untuk mencapai perkhidmatan 'Sistem Pengurusan Pembelajaran' (LMS). *(I believe adequate ICT facilities are available at my unit to access the LMS services).*	1	2	3	4	5

*SD = Strongly Disagree / SA = Strongly Agree

Latihan (TR) ***Training (TR)***			SD				SA
20	TR-1	I believe adequate training will help me to use the LMS services. *(Saya percaya latihan yang cukup akan membantu saya untuk menggunakan perkhidmatan LMS)*	1	2	3	4	5
21	TR-2	I believe adequate training will encourage me to use the LMS more frequently. *(Saya percaya latihan yang cukup akan menggalakkan saya untuk menggunakan LMS dengan lebih kerap)*	1	2	3	4	5
22	TR-3	I believe the organization should provide training on the usage of the LMS. *(Saya percaya pihak organisasi perlu menyediakan latihan untuk menggunakan LMS).*	1	2	3	4	5
23	TR-4	I believe by having a training session will make me more comfortable to use the LMS. *(Saya percaya dengan adanya sesi latihan akan menjadikan saya lebih selesa untuk menggunkan LMS).*	1	2	3	4	5
24	TR-5	I believe a training session will help me to use the LMS to its full potential. *(Saya percaya sesi latihan akan membantu saya untuk menggunakan LMS secara sepenuhnya).*	1	2	3	4	5

UUM Universiti Utara Malaysia

*SD = Strongly Disagree / SA = Strongly Agree

Kecenderungan Pelajar (LI) ***Learners Intention (LI)***			SD				SA
25	LI-1	Saya percaya semua anggota di unit saya patut menggunakan kemudahan 'Sistem Pengurusan Pembelajaran' (LMS) pada masa akan datang. *(I believe that everyone in my unit should use the LMS facilities in the future).*	1	2	3	4	5
26	LI-2	Saya menganggap penggunaan 'Sistem Pengurusan Pembelajaran' (LMS) adalah secara sukarela. *(I perceive using the LMS as voluntary).*	1	2	3	4	5
27	LI-3	Saya berhasrat untuk terus menggunakan 'Sistem Pengurusan Pembelajaran' (LMS) pada masa akan datang. *(I intend to continue using the LMS in the future).*	1	2	3	4	5

Thank you for your kind cooperation.

UUM
Universiti Utara Malaysia

Appendix B: Pilot Test Output

Reliability

Scale: Performance Expectancy Scale

```
RELIABILITY
  /VARIABLES=PE1 PE2 PE3 PE4 PE5
  /SCALE('PERFORMANCE EXPECTANCY SCALE') ALL
  /MODEL=ALPHA
  /STATISTICS=DESCRIPTIVE SCALE CORR
  /SUMMARY=TOTAL MEANS CORR.
```

Case Processing Summary

		N	%
Cases	Valid	40	100.0
	Excluded[a]	0	.0
	Total	40	100.0

a. Listwise deletion based on all variables in the procedure.

Universiti Utara Malaysia

Reliability Statistics

Cronbach's Alpha	Cronbach's Alpha Based on Standardized Items	N of Items
.939	.939	5

Reliability

Scale: Effort Expectancy Scale

```
RELIABILITY
  /VARIABLES=EE1 EE2 EE3 EE4
  /SCALE('EFFORT EXPECTANCY SCALE') ALL
  /MODEL=ALPHA
  /STATISTICS=DESCRIPTIVE SCALE CORR
  /SUMMARY=TOTAL MEANS CORR.
```

Case Processing Summary

		N	%
Cases	Valid	40	100.0
	Excluded[a]	0	.0
	Total	40	100.0

a. Listwise deletion based on all variables in the procedure.

UUM Universiti Utara Malaysia

Reliability Statistics

Cronbach's Alpha	Cronbach's Alpha Based on Standardized Items	N of Items
.914	.914	4

Reliability

Scale: Social Influence Scale

```
RELIABILITY
  /VARIABLES=SI1 SI2 SI3 SI4 SI5
  /SCALE('SOCIAL INFLUENCE SCALE') ALL
  /MODEL=ALPHA
  /STATISTICS=DESCRIPTIVE SCALE CORR
  /SUMMARY=TOTAL MEANS CORR.
```

Case Processing Summary

		N	%
Cases	Valid	40	100.0
	Excluded[a]	0	.0
	Total	40	100.0

a. Listwise deletion based on all variables in the procedure.

Reliability Statistics

Cronbach's Alpha	Cronbach's Alpha Based on Standardized Items	N of Items
.930	.930	5

UUM Universiti Utara Malaysia

Reliability

Scale: Facilitating Conditions Scale

```
RELIABILITY
  /VARIABLES=FC1 FC2 FC3 FC4 FC5
  /SCALE('FACILITATING CONDITIONS SCALE') ALL
  /MODEL=ALPHA
  /STATISTICS=DESCRIPTIVE SCALE CORR
  /SUMMARY=TOTAL MEANS CORR.
```

Case Processing Summary

		N	%
Cases	Valid	40	100.0
	Excluded[a]	0	.0
	Total	40	100.0

a. Listwise deletion based on all variables in the procedure.

UUM Universiti Utara Malaysia

Reliability Statistics

Cronbach's Alpha	Cronbach's Alpha Based on Standardized Items	N of Items
.939	.940	5

Reliability

Scale: Training Scale

```
RELIABILITY
  /VARIABLES=TR1 TR2 TR3 TR4 TR5
  /SCALE('TRAINING SCALE') ALL
  /MODEL=ALPHA
  /STATISTICS=DESCRIPTIVE SCALE CORR
  /SUMMARY=TOTAL MEANS CORR.
```

Case Processing Summary

		N	%
Cases	Valid	40	100.0
	Excluded[a]	0	.0
	Total	40	100.0

a. Listwise deletion based on all variables in the procedure.

Universiti Utara Malaysia

Reliability Statistics

Cronbach's Alpha	Cronbach's Alpha Based on Standardized Items	N of Items
.941	.941	5

Reliability

Scale: Learners Intention Scale

```
RELIABILITY
  /VARIABLES=LI1 LI2 LI3
  /SCALE('LEARNERS INTENTION SCALE') ALL
  /MODEL=ALPHA
  /STATISTICS=DESCRIPTIVE SCALE CORR
  /SUMMARY=TOTAL MEANS CORR.
```

Case Processing Summary

		N	%
Cases	Valid	40	100.0
	Excluded[a]	0	.0
	Total	40	100.0

a. Listwise deletion based on all variables in the procedure.

UUM Universiti Utara Malaysia

Reliability Statistics

Cronbach's Alpha	Cronbach's Alpha Based on Standardized Items	N of Items
.933	.939	3

Appendix C: Respondents' Demographic Profile

Statistics

		Gender	Region	Age	Working Experience	Education
N	Valid	325	325	325	325	325
	Missing	0	0	0	0	0

Gender

		Frequency	Percent	Valid Percent	Cumulative Percent
Valid	Male	278	85.5	85.5	85.5
	Female	47	14.5	14.5	100.0
	Total	325	100.0	100.0	

Region

		Frequency	Percent	Valid Percent	Cumulative Percent
Valid	Central Region	121	37.2	37.2	37.2
	Northern Region	100	30.8	30.8	68.0
	Eastern Region	42	12.9	12.9	80.9
	Southern Region	16	4.9	4.9	85.8
	Sabah Region	17	5.2	5.2	91.1
	Sarawak Region	29	8.9	8.9	100.0
	Total	325	100.0	100.0	

Age

		Frequency	Percent	Valid Percent	Cumulative Percent
Valid	20-30 years	25	7.7	7.7	7.7
	31-40 years	157	48.3	48.3	56.0
	41-50 years	70	21.5	21.5	77.5
	51-60 years	73	22.5	22.5	100.0
	Total	325	100.0	100.0	

Universiti Utara Malaysia

Working Experience

		Frequency	Percent	Valid Percent	Cumulative Percent
Valid	Below 5 years	11	3.4	3.4	3.4
	5-10 years	116	35.7	35.7	39.1
	11-20 years	67	20.6	20.6	59.7
	21-30 years	70	21.5	21.5	81.2
	More than 30 years	61	18.8	18.8	100.0
	Total	325	100.0	100.0	

Education

		Frequency	Percent	Valid Percent	Cumulative Percent
Valid	Certificate/Diploma or lower	215	66.2	66.2	66.2
	Bachelor Degree	93	28.6	28.6	94.8
	Master's Degree	15	4.6	4.6	99.4
	Doctorate Degree	2	.6	.6	100.0
	Total	325	100.0	100.0	

Universiti Utara Malaysia

Appendix D: Data Screening and Cleaning

Case Processing Summary

	Cases					
	Valid		Missing		Total	
	N	Percent	N	Percent	N	Percent
Gender	325	100.0%	0	0.0%	325	100.0%
Region	325	100.0%	0	0.0%	325	100.0%
Age	325	100.0%	0	0.0%	325	100.0%
Working Experience	325	100.0%	0	0.0%	325	100.0%
Education	325	100.0%	0	0.0%	325	100.0%

Case Processing Summary

	Cases					
	Valid		Missing		Total	
	N	Percent	N	Percent	N	Percent
PE1	325	100.0%	0	0.0%	325	100.0%
PE2	325	100.0%	0	0.0%	325	100.0%
PE3	325	100.0%	0	0.0%	325	100.0%
PE4	325	100.0%	0	0.0%	325	100.0%
PE5	325	100.0%	0	0.0%	325	100.0%

Case Processing Summary

	Cases					
	Valid		Missing		Total	
	N	Percent	N	Percent	N	Percent
EE1	325	100.0%	0	0.0%	325	100.0%
EE2	325	100.0%	0	0.0%	325	100.0%
EE3	325	100.0%	0	0.0%	325	100.0%
EE4	325	100.0%	0	0.0%	325	100.0%

Universiti Utara Malaysia

Case Processing Summary

	Cases					
	Valid		Missing		Total	
	N	Percent	N	Percent	N	Percent
SI1	325	100.0%	0	0.0%	325	100.0%
SI2	325	100.0%	0	0.0%	325	100.0%
SI3	325	100.0%	0	0.0%	325	100.0%
SI4	325	100.0%	0	0.0%	325	100.0%
SI5	325	100.0%	0	0.0%	325	100.0%

Case Processing Summary

	Cases					
	Valid		Missing		Total	
	N	Percent	N	Percent	N	Percent
FC1	325	100.0%	0	0.0%	325	100.0%
FC2	325	100.0%	0	0.0%	325	100.0%
FC3	325	100.0%	0	0.0%	325	100.0%
FC4	325	100.0%	0	0.0%	325	100.0%
FC5	325	100.0%	0	0.0%	325	100.0%

Universiti Utara Malaysia

Case Processing Summary

	Cases					
	Valid		Missing		Total	
	N	Percent	N	Percent	N	Percent
TR1	325	100.0%	0	0.0%	325	100.0%
TR2	325	100.0%	0	0.0%	325	100.0%
TR3	325	100.0%	0	0.0%	325	100.0%
TR4	325	100.0%	0	0.0%	325	100.0%
TR5	325	100.0%	0	0.0%	325	100.0%

Case Processing Summary

	Cases					
	Valid		Missing		Total	
	N	Percent	N	Percent	N	Percent
LI1	325	100.0%	0	0.0%	325	100.0%
LI2	325	100.0%	0	0.0%	325	100.0%
LI3	325	100.0%	0	0.0%	325	100.0%

Appendix E: Normality Test

Descriptive Statistics

	N	Minimum	Maximum	Mean	Std. Deviation	Skewness		Kurtosis	
	Statistic	Statistic	Statistic	Statistic	Statistic	Statistic	Std. Error	Statistic	Std. Error
MeanPERFORMANCE EXPECTANCY	325	3.00	5.00	4.2283	.56541	-.168	.135	-.423	.270
MeanEFFORTEXPECTANCY	325	3.00	5.00	4.1577	.55167	-.054	.135	-.216	.270
MeanSOCIALINFLUENCES	325	3.00	5.00	4.0985	.54424	.057	.135	-.222	.270
MeanFACILITATING CONDITIONS	325	3.00	5.00	4.0892	.54050	.070	.135	-.139	.270
MeanTRAINING	325	3.00	5.00	4.2320	.56412	-.246	.135	-.364	.270
MeanLEARNERSINTENTION	325	3.00	5.00	4.1436	.56404	-.018	.135	-.407	.270
Valid N (listwise)	325								

Universiti Utara Malaysia

Appendix F: Multicollinearity Test

Variables Entered/Removed[a]

Model	Variables Entered	Variables Removed	Method
1	MeanTRAINING, MeanPERFORMANCEEXPECTANCY, MeanFACILITATINGCONDITIONS, MeanSOCIALINFLUENCES, MeanEFFORTEXPECTANCY[b]	.	Enter

a. Dependent Variable: MeanLEARNERSINTENTION
b. All requested variables entered.

Model Summary[b]

Model	R	R Square	Adjusted R Square	Std. Error of the Estimate
1	.886[a]	.784	.781	.26407

a. Predictors: (Constant), MeanTRAINING, MeanPERFORMANCEEXPECTANCY, MeanFACILITATINGCONDITIONS, MeanSOCIALINFLUENCES, MeanEFFORTEXPECTANCY
b. Dependent Variable: MeanLEARNERSINTENTION

Universiti Utara Malaysia

ANOVA[a]

Model		Sum of Squares	df	Mean Square	F	Sig.
1	Regression	80.832	5	16.166	231.826	.000[b]
	Residual	22.245	319	.070		
	Total	103.077	324			

a. Dependent Variable: MeanLEARNERSINTENTION
b. Predictors: (Constant), MeanTRAINING, MeanPERFORMANCEEXPECTANCY, MeanFACILITATINGCONDITIONS, MeanSOCIALINFLUENCES, MeanEFFORTEXPECTANCY

Coefficients[a]

Model		Unstandardized Coefficients B	Unstandardized Coefficients Std. Error	Standardized Coefficients Beta	t	Sig.
1	(Constant)	.160	.121		1.326	.186
	MeanPERFORMANCEEXPECTANCY	-.069	.055	-.069	-1.255	.210
	MeanEFFORTEXPECTANCY	.082	.072	.080	1.135	.257
	MeanSOCIALINFLUENCES	.368	.070	.355	5.230	.000
	MeanFACILITATINGCONDITIONS	.181	.064	.173	2.848	.005
	MeanTRAINING	.398	.049	.399	8.135	.000

a. Dependent Variable: MeanLEARNERSINTENTION

Collinearity Diagnostics[a]

Model	Dimension	Eigenvalue	Condition Index	Variance Proportions (Constant)	MeanPERFORMANCEEXPECTANCY	MeanEFFORTEXPECTANCY	MeanSOCIALINFLUENCES	MeanFACILITATINGCONDITIONS	MeanTRAINING
1	1	5.975	1.000	.00	.00	.00	.00	.00	.00
	2	.012	21.899	.99	.01	.01	.01	.01	.01
	3	.005	36.224	.00	.41	.00	.09	.21	.06
	4	.004	37.996	.01	.10	.06	.02	.00	.87
	5	.002	54.846	.00	.28	.19	.27	.72	.06
	6	.002	61.154	.00	.21	.73	.61	.06	.00

a. Dependent Variable: MeanLEARNERSINTENTION

Universiti Utara Malaysia

Appendix G: Descriptive Statistic

T-Test between Gender and Learners Intention

Group Statistics

	Gender	N	Mean	Std. Deviation	Std. Error Mean
MeanLEARNERSINTENTION	Male	278	4.1499	.57099	.03425
	Female	47	4.1064	.52524	.07661

Independent Samples Test

		Levene's Test for Equality of Variances		t-test for Equality of Means						
									95% Confidence Interval of the Difference	
		F	Sig.	t	df	Sig. (2-tailed)	Mean Difference	Std. Error Difference	Lower	Upper
MeanLEARNERS INTENTION	Equal variances assumed	1.338	.248	.488	323	.626	.04350	.08906	-.13172	.21871
	Equal variances not assumed			.518	65.782	.606	.04350	.08392	-.12406	.21106

One-Way ANOVA analysis between Region and Learners Intention

Descriptives

Mean LEARNERS INTENTION

	N	Mean	Std. Deviation	Std. Error	95% Confidence Interval for Mean		Minimum	Maximum
					Lower Bound	Upper Bound		
Central Region	121	4.0854	.58615	.05329	3.9799	4.1909	3.00	5.00
Northern Region	100	4.1600	.56751	.05675	4.0474	4.2726	3.00	5.00
Eastern Region	42	4.1984	.48310	.07454	4.0479	4.3490	3.00	5.00
Southern Region	16	3.9583	.51460	.12865	3.6841	4.2325	3.00	5.00
Sabah Region	17	4.2745	.67941	.16478	3.9252	4.6238	3.00	5.00
Sarawak Region	29	4.2759	.50450	.09368	4.0840	4.4678	3.00	5.00
Total	325	4.1436	.56404	.03129	4.0820	4.2051	3.00	5.00

Test of Homogeneity of Variances

		Levene Statistic	df1	df2	Sig.
MeanLEARNERS INTENTION	Based on Mean	1.112	5	319	.354
	Based on Median	.875	5	319	.498
	Based on Median and with adjusted df	.875	5	317.823	.498
	Based on trimmed mean	1.155	5	319	.331

Universiti Utara Malaysia

ANOVA

MeanLEARNERSINTENTION

	Sum of Squares	df	Mean Square	F	Sig.
Between Groups	1.911	5	.382	1.205	.307
Within Groups	101.166	319	.317		
Total	103.077	324			

Robust Tests of Equality of Means

MeanLEARNERSINTENTION

	Statistic[a]	df1	df2	Sig.
Welch	1.252	5	68.087	.295
Brown-Forsythe	1.223	5	122.114	.303

a. Asymptotically F distributed.

Universiti Utara Malaysia

One-Way ANOVA analysis between Age Group and Learners Intention

Descriptives

MeanLEARNERSINTENTION

	N	Mean	Std. Deviation	Std. Error	95% Confidence Interval for Mean		Minimum	Maximum
					Lower Bound	Upper Bound		
20-30 years	25	4.2133	.51711	.10342	3.9999	4.4268	3.33	5.00
31-40 years	157	4.1274	.58047	.04633	4.0359	4.2189	3.00	5.00

41-50 years	70	4.0571	.56172	.06714	3.9232	4.1911	3.00	5.00
51-60 years	73	4.2374	.54000	.06320	4.1115	4.3634	3.00	5.00
Total	325	4.1436	.56404	.03129	4.0820	4.2051	3.00	5.00

Test of Homogeneity of Variances

		Levene Statistic	df1	df2	Sig.
MeanLEARNERS INTENTION	Based on Mean	.432	3	321	.730
	Based on Median	.118	3	321	.950
	Based on Median and with adjusted df	.118	3	320.090	.950
	Based on trimmed mean	.472	3	321	.702

ANOVA

MeanLEARNERSINTENTION

	Sum of Squares	df	Mean Square	F	Sig.
Between Groups	1.329	3	.443	1.398	.243
Within Groups	101.748	321	.317		
Total	103.077	324			

Universiti Utara Malaysia

Robust Tests of Equality of Means

MeanLEARNERSINTENTION

	Statistic[a]	df1	df2	Sig.
Welch	1.456	3	93.844	.232
Brown-Forsythe	1.485	3	184.801	.220

a. Asymptotically F distributed.

Universiti Utara Malaysia

One-Way ANOVA analysis between Working Experience and Learners Intention

Descriptives

MeanLEARNERSINTENTION

	N	Mean	Std. Deviation	Std. Error	95% Confidence Interval for Mean		Minimum	Maximum
					Lower Bound	Upper Bound		
Below 5 years	11	4.2121	.67120	.20237	3.7612	4.6630	3.00	5.00
5-10 years	116	4.2155	.54773	.05086	4.1148	4.3163	3.00	5.00
11-20 years	67	3.9652	.56298	.06878	3.8279	4.1025	3.00	5.00
21-30 years	70	4.1190	.57605	.06885	3.9817	4.2564	3.00	5.00
More than 30 years	61	4.2186	.53363	.06832	4.0819	4.3552	3.00	5.00
Total	325	4.1436	.56404	.03129	4.0820	4.2051	3.00	5.00

Test of Homogeneity of Variances

		Levene Statistic	df1	df2	Sig.
MeanLEARNERS INTENTION	Based on Mean	.639	4	320	.635
	Based on Median	.259	4	320	.904
	Based on Median and with adjusted df	.259	4	319.254	.904
	Based on trimmed mean	.714	4	320	.583

Universiti Utara Malaysia

ANOVA

MeanLEARNERSINTENTION

	Sum of Squares	df	Mean Square	F	Sig.
Between Groups	3.170	4	.792	2.538	.040
Within Groups	99.907	320	.312		
Total	103.077	324			

Robust Tests of Equality of Means

MeanLEARNERSINTENTION

	Statistic[a]	df1	df2	Sig.
Welch	2.463	4	62.354	.054
Brown-Forsythe	2.311	4	85.103	.064

a. Asymptotically F distributed.

Universiti Utara Malaysia

One-Way ANOVA analysis between Education and Learners Intention

Descriptives

MeanLEARNERSINTENTION

	N	Mean	Std. Deviation	Std. Error	95% Confidence Interval for Mean		Minimum	Maximum
					Lower Bound	Upper Bound		
Certificate/Diploma or lower	215	4.1225	.55064	.03755	4.0485	4.1965	3.00	5.00
Bachelor Degree	93	4.1613	.58897	.06107	4.0400	4.2826	3.00	5.00
Master's Degree	15	4.3556	.49548	.12793	4.0812	4.6299	3.33	5.00
Doctorate Degree	2	4.0000	1.41421	1.00000	-8.7062	16.7062	3.00	5.00
Total	325	4.1436	.56404	.03129	4.0820	4.2051	3.00	5.00

Universiti Utara Malaysia

Test of Homogeneity of Variances

		Levene Statistic	df1	df2	Sig.
MeanLEARNERS INTENTION	Based on Mean	2.389	3	321	.069
	Based on Median	1.709	3	321	.165
	Based on Median and with adjusted df	1.709	3	316.222	.165
	Based on trimmed mean	2.463	3	321	.062

ANOVA

MeanLEARNERSINTENTION

	Sum of Squares	df	Mean Square	F	Sig.
Between Groups	.840	3	.280	.879	.452
Within Groups	102.237	321	.318		
Total	103.077	324			

Robust Tests of Equality of Means

MeanLEARNERSINTENTION

	Statistic[a]	df1	df2	Sig.
Welch	.820	3	4.682	.539
Brown-Forsythe	.327	3	1.673	.813

a. Asymptotically F distributed.

Appendix H: Correlations Test

Universiti Utara Malaysia

Correlations

		Mean PERFORMANCE EXPECTANCY	Mean EFFORT EXPECTANCY	Mean SOCIAL INFLUENCES	Mean FACILITATING CONDITIONS	Mean TRAINING	Mean LEARNERS INTENTION
MeanPERFORMANCE EXPECTANCY	Pearson Correlation	1	.867**	.799**	.764**	.785**	.729**
	Sig. (2-tailed)		.000	.000	.000	.000	.000
	N	325	325	325	325	325	325
MeanEFFORT EXPECTANCY	Pearson Correlation	.867**	1	.888**	.849**	.798**	.801**
	Sig. (2-tailed)	.000		.000	.000	.000	.000
	N	325	325	325	325	325	325
MeanSOCIAL INFLUENCES	Pearson Correlation	.799**	.888**	1	.886**	.791**	.840**
	Sig. (2-tailed)	.000	.000		.000	.000	.000
	N	325	325	325	325	325	325
MeanFACILITATING CONDITIONS	Pearson Correlation	.764**	.849**	.886**	1	.798**	.821**
	Sig. (2-tailed)	.000	.000	.000		.000	.000
	N	325	325	325	325	325	325
MeanTRAINING	Pearson Correlation	.785**	.798**	.791**	.798**	1	.827**

Universiti Utara Malaysia

	Sig. (2-tailed)	.000	.000	.000	.000		.000
	N	325	325	325	325	325	325
MeanLEARNERS INTENTION	Pearson Correlation	.729**	.801**	.840**	.821**	.827**	1
	Sig. (2-tailed)	.000	.000	.000	.000	.000	
	N	325	325	325	325	325	325

**. Correlation is significant at the 0.01 level (2-tailed).

Universiti Utara Malaysia

Appendix I: The Research Model in PLS

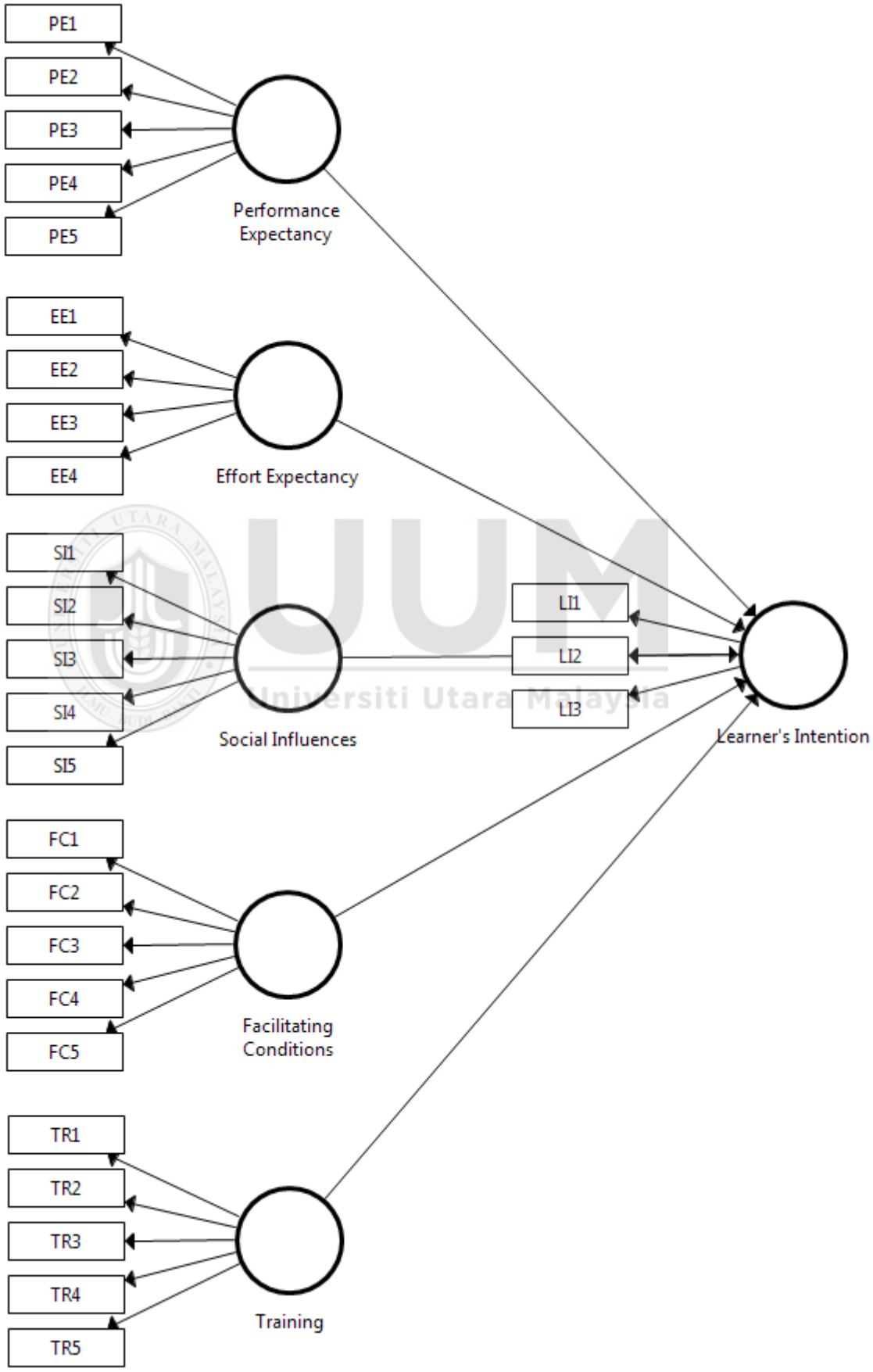

Universiti Utara Malaysia

Appendix J: Cross Loadings

Items	Effort Expectancy	Facilitating Conditions	Learner's Intention	Performance Expectancy	Social Influences	Training
EE1	**0.891**	0.733	0.684	0.767	0.787	0.679
EE2	**0.935**	0.818	0.770	0.810	0.844	0.773
EE3	**0.928**	0.792	0.729	0.801	0.802	0.728
EE4	**0.896**	0.767	0.745	0.789	0.811	0.738
FC1	0.760	**0.878**	0.710	0.683	0.788	0.685
FC2	0.694	**0.869**	0.698	0.603	0.751	0.650
FC3	0.794	**0.896**	0.765	0.720	0.819	0.742
FC4	0.772	**0.872**	0.760	0.703	0.801	0.724
FC5	0.693	**0.847**	0.672	0.626	0.710	0.685
LI1	0.727	0.813	**0.919**	0.678	0.792	0.759
LI2	0.694	0.673	**0.874**	0.629	0.720	0.701
LI3	0.773	0.772	**0.940**	0.689	0.788	0.806
PE1	0.774	0.694	0.664	**0.908**	0.746	0.693
PE2	0.813	0.714	0.647	**0.900**	0.738	0.720
PE3	0.801	0.704	0.676	**0.924**	0.706	0.718
PE4	0.797	0.703	0.668	**0.933**	0.740	0.734
PE5	0.795	0.700	0.697	**0.922**	0.733	0.736
SI1	0.810	0.761	0.751	0.745	**0.895**	0.712
SI2	0.824	0.789	0.738	0.729	**0.919**	0.705
SI3	0.747	0.818	0.748	0.654	**0.883**	0.649
SI4	0.754	0.776	0.757	0.683	**0.868**	0.706
SI5	0.820	0.808	0.752	0.741	**0.886**	0.753
TR1	0.765	0.766	0.755	0.723	0.747	**0.895**
TR2	0.734	0.765	0.767	0.724	0.730	**0.912**
TR3	0.704	0.695	0.756	0.702	0.705	**0.919**
TR4	0.701	0.680	0.745	0.715	0.695	**0.909**
TR5	0.739	0.735	0.758	0.712	0.731	**0.920**

Universiti Utara Malaysia

Appendix K: Coefficient of Determination (R2)

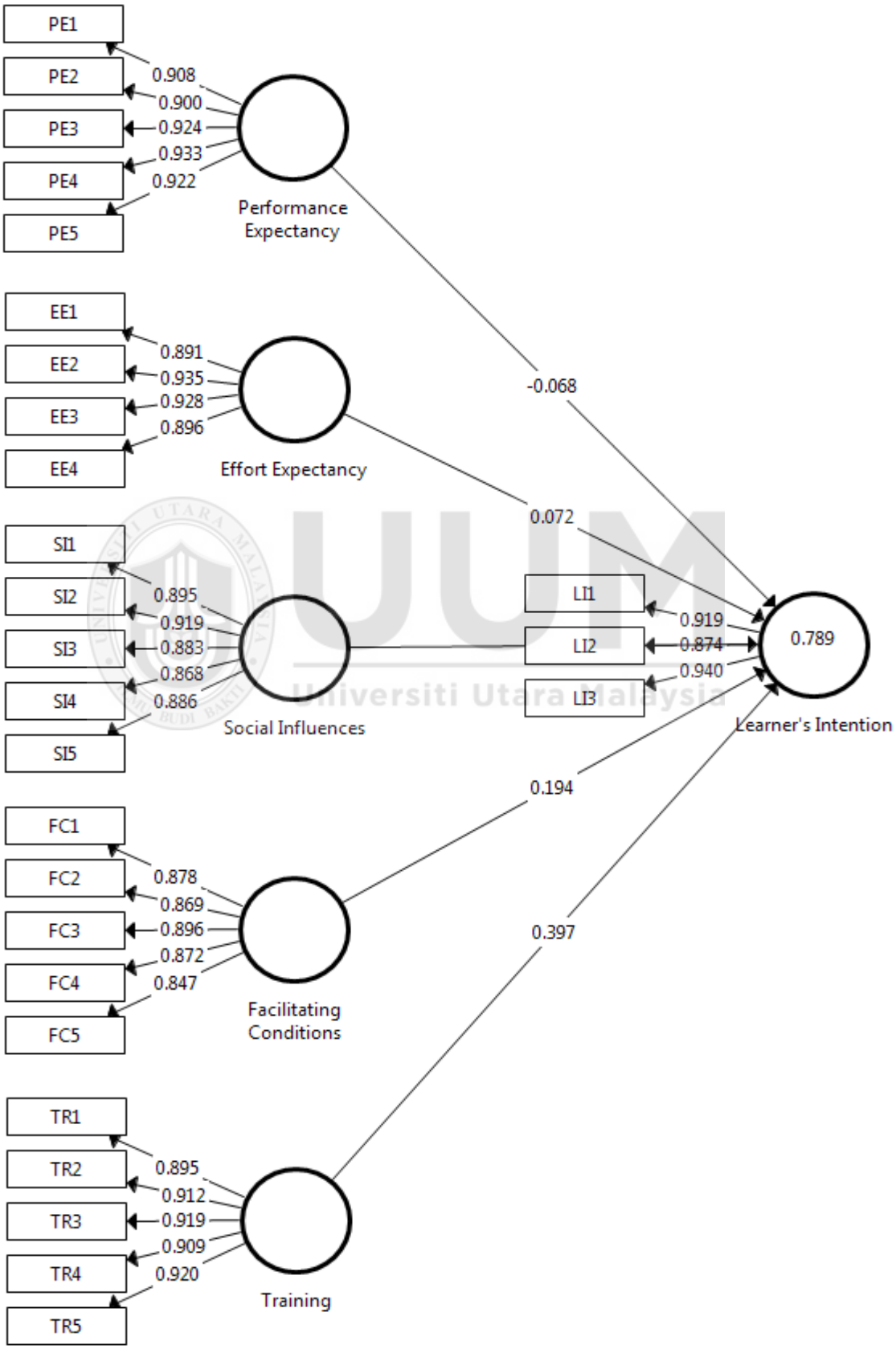

Universiti Utara Malaysia

Appendix L: Path Model Significance Results (Bootstrapping)

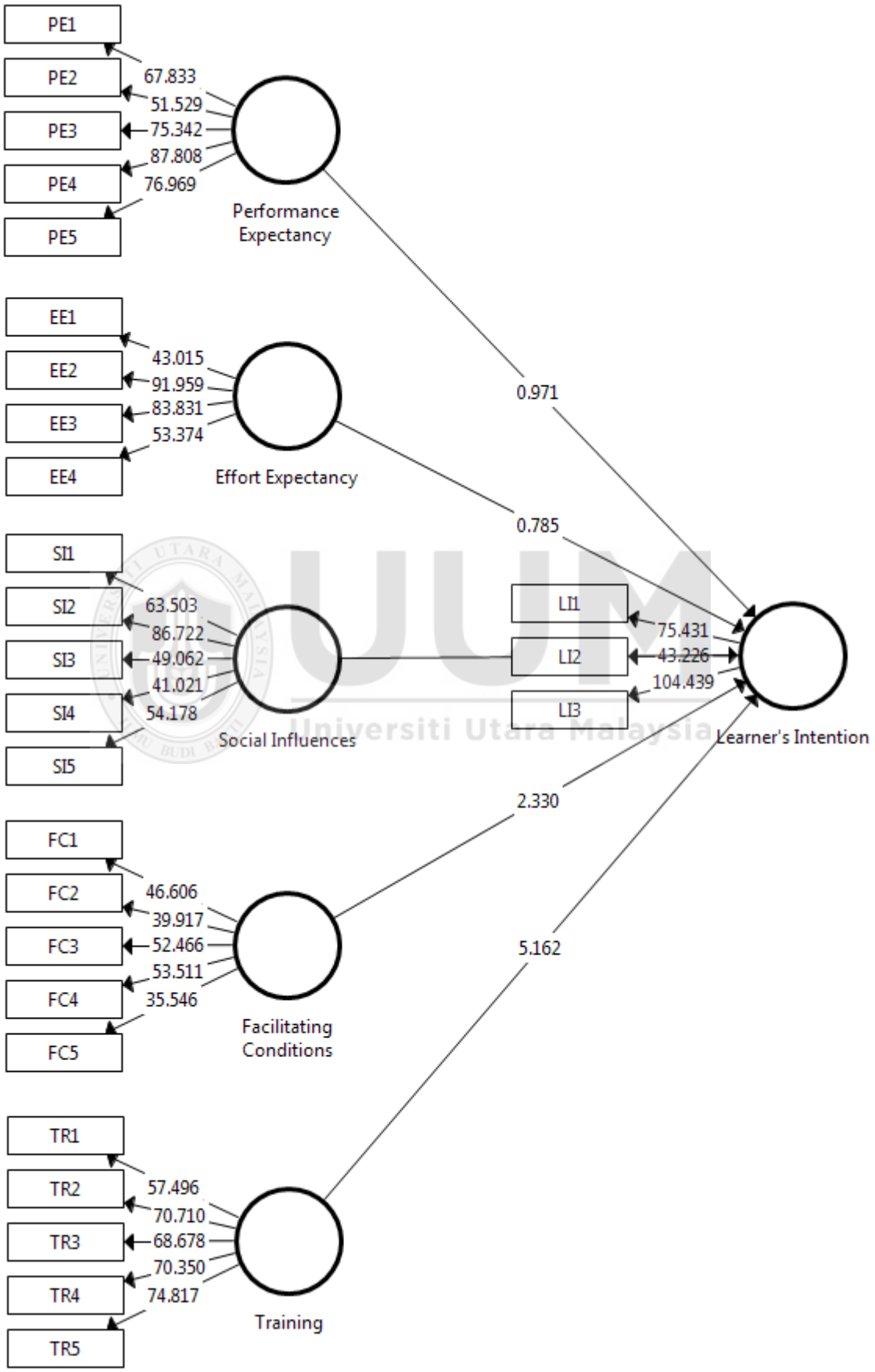

Universiti Utara Malaysia